KEBA

Automation by innovation.

Servo Drive System ServoOne

System catalogue

ServoOne junior 2 A to 16 A

ServoOne single-axis system 4 A to 450 A

ServoOne multi-axis system 4 A to 450 A with regeneration

Servo Drive System ServoOne
System catalogue

ID no.: 1100.24B.8-00 • Date: 01/2022

Subject to technical change without notice.
The content of our catalogue was compiled with the greatest care and attention, and based on the latest information available to us.
We should nevertheless point out that this document cannot always be updated simultaneously with the ongoing technical development of our products.
Information and specifications may be subject to change at any time. Please obtain information about the latest version at Documentation and Downloads.


KEBA

Register

Table of contents

1 Overview of the functions of the ServoOne family

The modularity of the ServoOne family guarantees you optimum integration into the machine process at all times. A co-ordinated single-axis and energy-efficient multi-axis system meet the needs of any application across a wide power range. Whether in high-speed field bus communication with the central multi-axis machine controller or with distributed Motion Control intelligence in the drive controller – the ServoOne is a master of both. See for yourself the comprehensive functionality of the ServoOne and make use of its future-proof specification for your application!
Alongside top product quality, we offer you sound, specifically targeted advice, expert commissioning support, a sophisticated, needs-oriented ordering and shipment logistics system, as well as outstanding service and diagnostic capabilities.

AC 2-450 A

Servo drives from 2-450 A for AC-supplied single-axis applications
with AC mains connection 1/3 x 230 V - 3 x 480 V

DC 4-450 A

Servo drives from 4-450 A as DC-supplied multi-axis system
with sinusoidal regenerative power supply units

High-speed communication
based on a wide variety of profile-compliant field bus interfaces (EtherCAT, sercos II & III, PROFINET IRT, CANopen, ...)

High-performance motor control
for precise, dynamic movement
of a wide variety of linear and rotary motor systems

Co-ordinated software functions and packages
with Motion Control functionality for any application

iPLC motion

iPlc according to IEC 61131 integrated
permitting rapid adaptation to the application
with direct access to the drive controller peripherals

FUNCTIONAL SAFETY

Integrated functional safety
ensures personal protection directly in the drive controller

Compact size
for optimal switch cabinet utilisation

Flexible cooling methods
featuring air or liquid cooling

Future-proof
thanks to a flexible expansion concept

Comprehensive PC software
for project planning, commissioning and programming of multi-axis drive systems

1.1 Overview of ServoOne family

ServoOne junior

Chapter 2

Optimised for the lower power range, the ServoOne junior comes with all the technological genes present in the rest of the family. Full functional compatibility and uniform operation within the ServoOne family is guaranteed at all times.

- 3 - 8 A rated current at 1/3 x 230 V AC
- 2 - 16 A rated current at 3 x 400 - 480 V AC
- Up to 300% overload capacity

ServoOne single-axis system

Chapter 3

The ServoOne servocontroller is suitable for a broad spectrum of applications thanks to its very wide power range. From handling systems to complex test rigs, there are no limits to the diversity
of the applications covered.

- 4 - 450 A rated current at 3 x 230 - 480 V AC
- 8 sizes for optimum performance tailoring
- Air or liquid-cooled systems
- Safety control can be integrated

ServoOne multi-axis system

Chapter 4

Comprising DC-powered axis controllers and co-ordinated supply units with sinusoidal regenerative power supply, the multi-axis system offers a high degree of solutions expertise and flexibility. A constantly controlled DC link voltage ensures independence from varying mains voltages in different parts of the world. Surplus kinetic braking energy is converted into electric power and fed back into the supply system in sinusoidal form, thereby helping to preserve the environment as well as delivering financial benefits.

- Axis controllers 4 - 450 A rated current
- DC link fuses integrated (up to and including size BG6)
- Supply units with 26 kW - 360 kW DC input power

1.2 Functions of the ServoOne devices in detail

Hardware		AC SO junior	AC SO 4-450 A	DC SO 4-450 A	AC DC SO PSU 26-360 kW
Performance data					
Mains voltage		1/3 x 230 V AC 3 x 400 - 480 V AC	1 x 230 V AC 3 x 230 - 480 V AC	565 - 770 V DC	3 x 400 - 480 V AC
Rated current at 1 x 230 V AC		3 - 8 A (1/3 x 230 V)	4 A (1 x 230 V)	-	-
Rated current at 3 x 400 V AC		2 - 16 A	4 - 450 A	-	-
Rated current at 565 V DC		-	-	4 - 450 A	-
DC power		-	-	-	26 - 360 kW
Overload factor		3.0	1.5 - 2.0	1.5 - 3.0	1.0 - 2.0
Rotating field frequency		400 Hz	400 Hz 1600 Hz optional	400 Hz 1600 Hz optional	-
Power stage switching frequency		4, 8, 16 kHz	2, 4, 8, 12, 16 kHz	2, 4, 8, 12, 16 kHz	4, 8, 12 kHz
Sinusoidal regeneration		-	-	-	●
Brake chopper electronics integrated		●	●	-	●
Braking resistor integrated		○	○	-	-
Safety technology					
STO - Safe Torque Off		●	●[3]	●[3]	-
Integrated safety control		-	○[4]	○[4]	-
Control hardware					
Inputs, analogue (±10 V DC, 12 bits)		2	2	2	2
Outputs, analogue (±10 V DC, 2 x 12 bits)		-	○	○	-
Inputs/outputs, digital - standard		8/3	8/3	8/3	8/3
of which touch probe inputs		2	2	2	-
Digital input/output expansion (4 inputs/8 outputs, DIO)		○	○	○	-
Relay		1	1	1	1
Motor temperature monitoring		● PTC, KTY, PT1000, Klixon	● PTC, PT1000, KTY, Klixon	● PTC, PT1000, KTY, Klixon	-
Encoder systems					
Encoder channel 1	Resolver	●	●	●	-
Encoder channel 2	SinCos encoder with NP, SSI, EnDat or HIPERFACE®	●	●	●	-
	SSI encoder	●	●	●	-
	EnDat encoder digital	●	●	●	-
	TTL encoder	●	●	●	-
Field bus systems					
CANopen		○	○	○	○
PROFIBUS-DPV1		○	○	○	○
Sercos II		○	○	○	○
Sercos III		○	○	○	○
EtherCAT		○	○	○	○
PROFINET IRT		○	○	○	-
Powerlink[2]		○	○	○	-
Technology					
Second SinCos encoder	SinCos encoder with NP, SSI, EnDat	○	○	○	-
	SSI encoder	○	○	○	-
	EnDat encoder digital	○	○	○	-
	TTL encoder	○	○	○	-
One-cable system with HIPERFACE DSL encoders		○	-	-	-
TTL encoder simulation		○	○	○	-
SSI encoder simulation		-	○	○	-
TTL encoder with commutation signals		○	○	○	-
Bidirectional axis cross-communication (TwinSync, max. 2 axes)		-	○	○	-
Cooling methods					
Air cooling		●	● Up to S084.170	● Up to S084.170	● Up to S084.170.S
Liquid cooling		-	● From S084.045	● From S084.016	●

● = Standard ○ = Optional - Not available 2) In preparation 3) See section 3-15 or 4-22 4) FS only for BG1 to BG5

Hardware	AC SO junior	AC SO 4-450 A	DC SO 4-450 A	AC DC SO PSU 26-360 kW
EMC acceptance				
Mains filter, integrated C2 (10 m) / C3 (25 m)	-	● Up to SO84.072	-	-
Mains filter, external C2 (10 m) / C3 (30 m)	○	-	-	-
Mains filter, external C2 (100 m) / C3 (150 m)	-	○	-	○
Acceptance	CE, UL	CE, UL[3]	CE, UL	CE, UL, UL to SO84.170.S

● = *Standard* ○ = *Optional* - *Not available* *2) In preparation* *3) UL without internal braking resistor*

Software functions	AC SO junior	AC SO 4-450 A	DC SO 4-450 A
Commissioning			
Automatic motor identification	●	●	●
Automatic encoder offset definition	●	●	●
Autotuning	●	●	●
Motor systems			
Rotary asynchronous motors	●	●	●
Rotary synchronous motors	●	●	●
Linear synchronous motors	●	●	●
Control modes			
Torque/force control	16 kHz	16 kHz	16 kHz
Speed control	8 kHz	8 kHz	8 kHz
Position control	8 kHz	8 kHz	8 kHz
Open-loop motor control VFC	-	○	○
Sensor-less control of synchronous motors	○[1]	○[1]	○[1]
Control functions			
Field weakening for asynchronous motors	●	●	●
Field weakening for synchronous motors	●	●	●
Autocommutation for synchronous motors	●	●	●
Acceleration pre-control	●	●	●
Predictive speed pre-control	●	●	●
Freely configurable filters (PT1-PT4, band elimination filter etc.)	●	●	●
Active vibration damping	●	●	●
Correction methods			
GPOC (encoder correction)	●	●	●
Friction torque compensation	●	●	●
Detent torque compensation	●	●	●
Axis/spindle error correction	●	●	●
Motion profiles			
Point-to-point positioning	●	●	●
Interpolating positioning	Linear, spline	Linear, spline	Linear, spline
Synchronous motion / electronic gearing	●	●	●
Modulo/rotary axis	●	●	●
Cam plates	○	○	○
Axis-guided homing runs	●	●	●
Virtual master	●	●	●
Standards-compliant motion profiles	CANopen CiA 402, sercos EtherCAT CoE, PROFIdrive	CANopen CiA 402, sercos EtherCAT CoE PROFIdrive	CANopen CiA 402, sercos EtherCAT CoE PROFIdrive
Scaling in user units (°, µm, …)	●	●	●
Technology			
Programmable in IEC 61131	○	○	○

● = *Standard* ○ = *Optional* - *Not available* *1) Included in function package HF*

Features of the safety control that can be integrated			
System			
Configuration mode		User-programmable safety control [5]	
Safety acceptance		SIL3 acc. to IEC 61508 / IEC 62061, PL e and cat 4 acc. to EN ISO 13849 [4]	
Control hardware			
Safe digital inputs		4 [3]	
Safe digital outputs		4 [3]	
… of which usable as safe pulse outputs		4	
Safe brake outputs		2 [3]	
Safety sensors that can be connected		Light grids, emergency stops, guard doors, laser scanners; mode selector switches, guard locks, enable buttons, two-handed controls, etc.	
Standard analogue inputs (±10 V, 12 bits)		2	
Standard digital inputs		6	
Safety functions		**Speed-dependent**	**Position-dependent**
STO	Safe Torque Off	●	
SS1	Safe Stop 1	●	
SS2	Safe Stop 2	●	
SLS	Safe Limited Speed	●	
SDI	Safe Direction	●	
SLSmax	Safe Limited Speed maximum	●	
ECS	Encoder Supervisor	●	
ESM	Encoder Standstill Monitoring	●	
SOS	Safe Operating Stop	●	●
SCA	Safe Cam	●	●
SLI	Safe Limited Increment		●
SLP	Safe Limited Position		●
SEL	Safe Emergency Limit		●
Safety functions (brake)			
SBC	Safe Brake Control	●	
Safety functions (bus systems)			
SCC	Safe Cross Communication	●	
Tools			
SafePLC S for ServoOne		●	
KeStudio DriveManager 5 (parameter changes)		●	

● = *Standard* O = *Optional* - *Not available*

3) SIL2; SIL3 with redundant use of the inputs/outputs (2-channel)

4) See section 3-15 or 4-22

5) Only up to BG5, AC and DC - not junior

1.3 Services

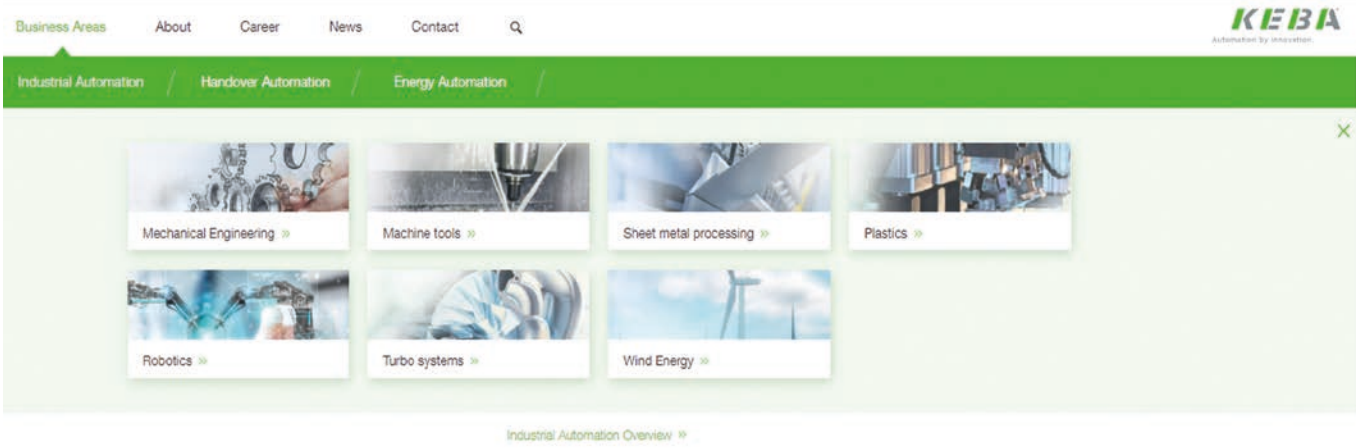

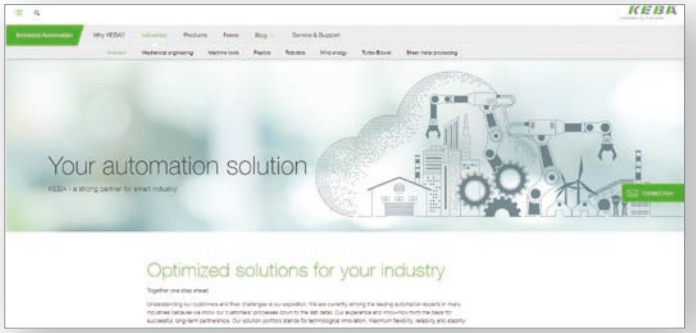

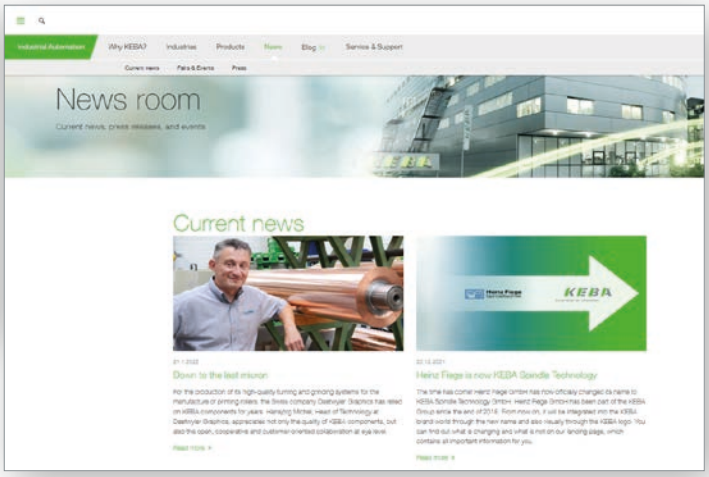

KEBA Industrial Automation Germany GmbH provides comprehensive information via the Internet. Whether you are looking for more detailed technical information about our products or about project planning and design, or want to contact our nearest representative - just visit our website: **www.keba.com.**

Or call us on +49 6441 966-0 to obtain detailed information material on our broad range of services, available in printed form as a convenient reference source.

Design-in

Professional project management that keeps you to deadlines and budgets is an important element of our joint success. The sooner you get to market with your new solution the better. That is why we can support you in:

- Analysing requirements
- Planning and drive design
- Preparing the functional specification
- Total cost analysis
- Project management

Logistics

To make ordering a routine exercise and reduce or even eliminate unnecessary formalities, the entire process is co-ordinated, from planning through ordering to spare parts supplies.

Software update service

As part of our product maintenance function we are continuously improving the quality of the drive system. Our software update service provides you with information about new releases and enhancements to the various firmware versions.

After-sales

You can call on our service and support wherever and whenever you need them. With our flexibility, fast response times, superior technical know-how and extensive user experience, we can offer a wide range of services, including:

- On-site commissioning.
- Advice and training.
- Repair / service concept.

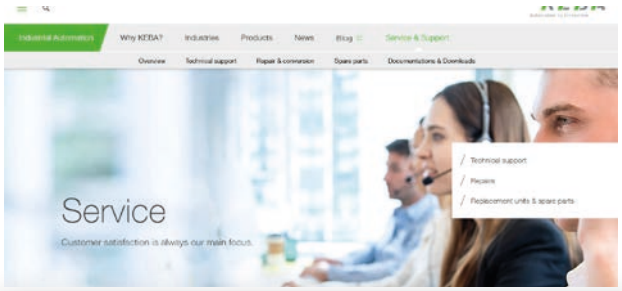

Helpline

Our Helpline can assist you with:

- Telephone commissioning of standard products and systems.
- Evaluating error and diagnostic displays.
- Locating and dealing with reproducible faults.
- Software updates.

To contact the Helpline:

Mo.-Fr.:	8 a.m. - 5 p.m. (CET)
Telephone:	+49 (0) 6441 966-180
E-mail:	helpline@keba.de
Internet:	► www.keba.com
	► Service
	► Helpline & Trouble Ticket

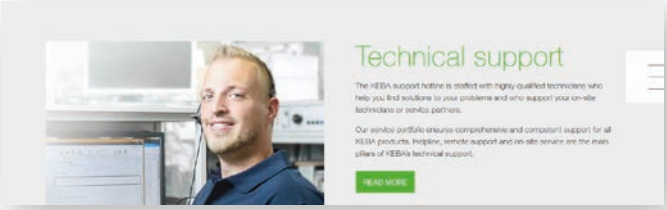

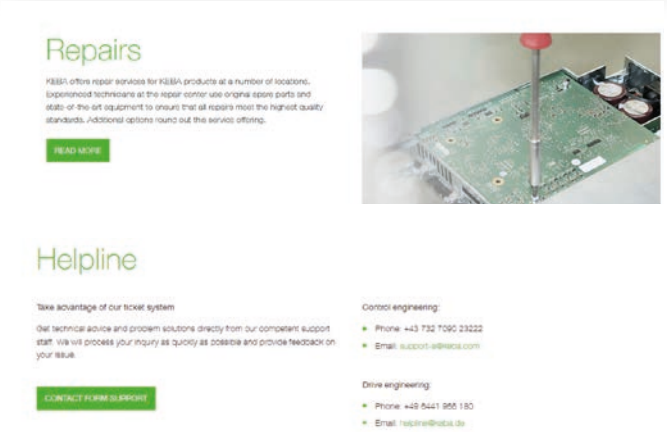

Downloads

You will find the latest comprehensive information about our products on our website:
www.keba.com in Documentation and Downloads

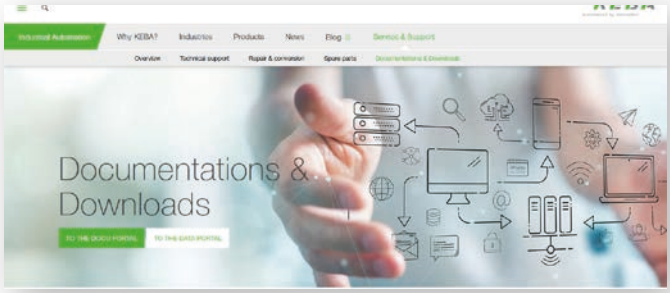

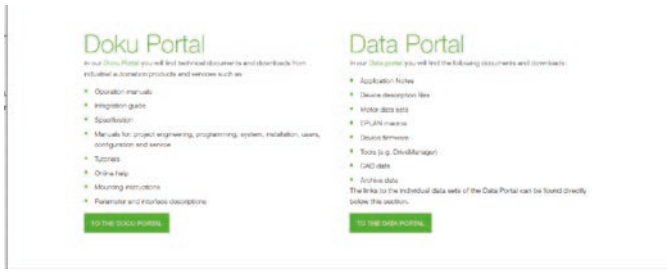

Space for your notes

2 ServoOne junior

BG2 BG3 BG4 BG5

2.1 Overview

Supply voltage 1 x 230 V / 3 x 230 V

Type	Size	Rated current	Current carrying capacity	Technical data
S022.003	BG2	3 A	2.4 on page 20	2.7 on page 26
S022.006	BG3	5.9 A	2.4 on page 20	2.9 on page 28
S022.008	BG4	8 A	2.4 on page 20	2.11 on page 30

Supply voltage 3 x 400 V

Type	Size	Rated current	Current carrying capacity	Technical data
S024.002	BG2	2 A	2.4 on page 20	2.7 on page 26
S024.004	BG3	3.5 A	2.4 on page 20	2.9 on page 28
S024.007	BG4	6.5 A	2.4 on page 20	2.9 on page 28
S024.012	BG5	12.0 A	on page 23	2.13 on page 32
S024.016	BG5	16.0 A	on page 23	2.13 on page 32

2.2 Order codes, ServoOne junior

Article designation	SO2	4	.	006	.	0	0	2	1	.	0	0	0	0	.	X
ServoOne junior (SOJ)																
Supply voltage: 3 x 400 V		4														
1/3 x 230 V		2														
Rated current	BG2	2.0 A		002												
		3.0 A		003												
	BG3	3.5 A		004												
		5.9 A		006												
	BG4	6.5 A		007												
		8 A		008												
	BG5	12 A		012												
		16 A		016												
Mains supply	AC					0										
Safety technology	STO						0									
Option 1 Communication	Not included							0								
	Sercos II							1								
	PROFIBUS							2								
	EtherCAT							3								
	CANopen							4								
	PROFINET							7								
	Sercos III							8								
Option 2 Technology	Not included								0							
	Second SinCos encoder								1							
	TTL encoder simulation/TTL master encoder								2							
	TWINsync communication								3							
	TTL encoder with commutation signals								5							
	Analogue/digital input/output expansion (MIO)								6							
	Digital input/output expansion (DIO)								8							
	One-cable interface								D							
Housing/cooling method	Air-cooled (standard)										0					
	Air-cooled with internal braking resistor (not BG2)										1					
Function package	Basic (without additional function package)											0				
	iPlc											1				
	Hydraulic											2				
	Hydraulic + iPLc											3				
Special design	None												0			
Protection	Standard													0		
	PCBs with protective varnish													1		
Hardware version	(May be multi-digit)															X

2.3 Features, ServoOne junior

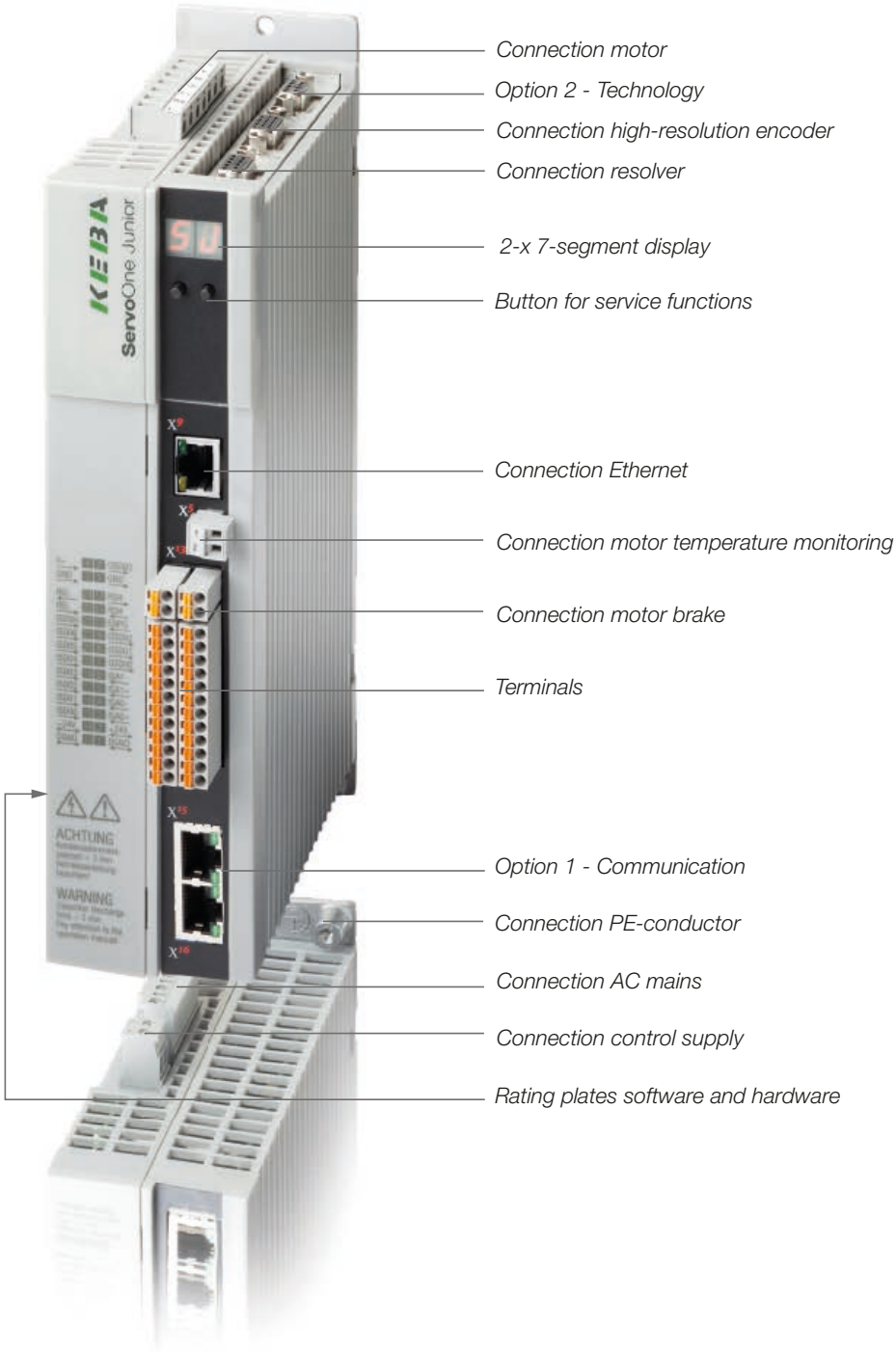

2.4 Current carrying capacity, ServoOne junior

The maximum permissible drive controller output current and the peak current are dependent on the mains voltage, the motor cable length, the power stage switching frequency and the ambient temperature. If the conditions change, the maximum permissible current carrying capacity of the servocontroller also changes.

Current carrying capacity, SO22.xxx BG2-BG4 single and three-phase

Device	Switching frequency of the power stage	Ambient temperature	Rated current	Overload capacity 1 x 230 V AC				Overload capacity 3 x 230 V AC			
				Overcurrent		Peak current		Overcurrent		Peak current	
	[kHz]	max. [°C]	I_N [A_{eff}]	[A_{eff}]	For time [s]	[A_{eff}]	For time [s]	[A_{eff}]	For time [s]	[A_{eff}]	For time [s]
SO22.003 BG2	4	45	3.0	6.0	10 [2]	9.0	0.1 [2]	6.0	10	9.0	0.1 [2]
	8	40	3.0	6.0	10 [2]	9.0 [1]	0.1 [1] [2]	6.0	10	9.0 [1]	0.1 [1] [2]
	16	40	2.0	4.0	10 [2]	9.0 [1]	0.1 [1] [2]	4.0	10	9.0 [1]	0.1 [1] [2]
SO22.006 BG3	4	45	5.9	11.8	10 [2]	[3]	[3]	11.8	10	17.7	0.1 [1] [2]
	8	40	5.9	11.8	10 [2]	[3]	[3]	11.8	10	17.7 [1]	0.1 [1] [2]
	16	40	5.9	11.8	10 [2]	[3]	[3]	11.8	10	17.7 [1]	0.1 [1] [2]
SO22.008 BG4	4	45	8.0	16.0	10 [2]	[3]	[3]	16.0	10	24.0	0.1 [1] [2]
	8	40	8.0	16.0	10 [2]	[3]	[3]	16.0	10	24.0 [1]	0.1 [1] [2]
	16	40	5.4	10.8	10 [2]	[3]	[3]	10.8	10	24.0 [1]	0.1 [1] [2]

1) With activation of the function "Automatic power stage switching frequency change to 4 kHz".

2) Shutdown as per I^2T characteristic

3) Operation at this operating point is not possible

Data apply for a motor cable length ≤ 10 m. Maximum permissible motor cable length 30 m. All current ratings with recommended mains choke.

Table 2.1 Rated current and peak current, BG2 to BG4 (1/3 x 230 V AC)

Current carrying capacity, SO24.xxx BG2-BG4 three-phase

Device	Switching frequency power stage	Ambient temperature	Overload capacity 400 V AC					Overload capacity 460 V AC				
			Rated current	Overcurrent		Peak current		Rated current	Overcurrent		Peak current	
	[kHz]	max. [°C]	I_N [A_{eff}]	[A_{eff}]	time [s]	[A_{eff}]	time [s]	I_N [A_{eff}]	[A_{eff}]	time [s]	[A_{eff}]	time [s]
SO24.002 BG2	4	45	2.0	4.0	10[2)]	6.0	0.1[2)]	2.0	4.0	10[2)]	6.0	0.1[2)]
	8	40	2.0	4.0	10[2)]	6.0[1)]	0.1[1)2)]	2.0	4.0	10[2)]	6.0[1)]	0.1[1)2)]
	16	40	0.7	1.4	10[2)]	6.0 [1)]	0.1[1)2)]	0.7	1.4	10[2)]	6.0[1)]	0.1[1)2)]
SO24.004 BG3	4	45	5.5	7.1	10[2)]	10.5	0.1[1)2)]	4.8	6.2	10[2)]	9.2	0.1[1)2)]
	8	40	3.5	7.0	10[2)]	10.5 [1)]	0.1[1)2)]	3.5	7.0[4)]	10[2)]	9.2[1)]	0.1[1)2)]
	16	40	2.9	5.8	10[2)]	10.5 [1)]	0.1[1)2)]	2.2	4.4	10[2)]	9.2[1)]	0.1[1)2)]
SO24.007 BG4	4	45	8.5	13.0	10[2)]	19.5	0.1[1)2)]	7.4	11.3	10[2)]	17.0	0.1[1)2)]
	8	40	6.5	13.0	10[2)]	19.5[1)]	0.1[1)2)]	6.5	11.3	10[2)]	17.0[1)]	0.1[1)2)]
	16	40	4.0	8.0	10[2)]	19.5[1)]	0.1[1)2)]	2.4	4.8	10[2)]	17.0[1)]	0.1[1)2)]

1) With activation of the function "Automatic power stage switching frequency change to 4 kHz". 2) Shutdown as per I^2t characteristic 3) Operation at this operating point is not possible 4) Operating point optimised

Data apply for a motor cable length ≤ 10 m. Maximum permissible motor cable length 30 m.

Table 2.2 Rated current and peak current, ServoOne junior BG2 to BG4

Current carrying capacity, SO24.xxx BG5

Device	Switching frequency power stage	Ambient temperature	Overload capacity 400 V AC				Overload capacity 460 V AC				Overload factor ≤5 Hz	For time [1)]
			Rated current	Peak current [A_{eff}] at rotating field frequency increasing linearly			Rated current	Peak current [A_{eff}] at rotating field frequency increasing linearly				
	[kHz]	max. [°C]	I_N [A_{eff}]	0 Hz	Up to 5 Hz	> 5 Hz	I_N [A_{eff}]	0 Hz	Up to 5 Hz	> 5 Hz	[%]	[s]
SO24.012 BG5	4	45	13	31.6	39		11.5	26	34.5		200 (300)	10 (0.1)
	8	40	12	20.6	28.8		10.5	16.3	25.2		200 (240)	10 (0.1)
	16	40	10.5	11.1	17.7		8.0	8.2	12.8		150 (160)	10 (0.1)
SO24.016 BG5	4	45	20	43.4	60		20	36.1	60		200 (300)	10 (0.1)
	8	40	16	25.4	33.6		15	17.4	31.5		200 (210)	10 (0.1)
	16	40	9	11.4	15.3		6.5	8.1	11		160 (170)	10 (0.1)

1) Shutdown as per I^2t characteristic

All data apply for a motor cable length ≤ 10 m. Maximum permissible motor cable length 30 m.

Table 2.3 Rated current and peak current, ServoOne junior BG5

Device	Switching frequency power stage	Ambient temperature	Overload capacity 480 V AC				
			Rated current	Overcurrent		Peak current	
	[kHz]	max. [°C]	I_N [A_{eff}]	[A_{eff}]	For time [s]	[A_{eff}]	For time [s]
S024.002 BG2	4	45	2.0	4.0	10[2)]	6.0	0.1[2)]
	8	40	1.7	3.4	10[2)]	6.0[1)]	0.1[1)2)]
	16	40	[3)]	[3)]	10[2)]	[3)]	0.1[1)2)]
S024.004 BG3	4	45	4.6	6.0	10[2)]	8.8	0.1[1)2)]
	8	40	2.6	5.2	10[2)]	8.8[1)]	0.1[1)2)]
	16	40	[3)]	[3)]	[3)]	[3)]	0.1[1)2) 3)]
S024.007 BG4	4	45	7.0	10.7	10[2)]	16	0.1[1)2)]
	8	40	6.5	10.7	10[2)]	16 [1)]	0.1[1)2)]
	16	40	1.9	3.8	10[2)]	16[1)]	0.1[1)2)]

1) With activation of the function "Automatic power stage switching frequency change to 4 kHz". 2) Shutdown as per I^2t characteristic 3) Operation at this operating point is not possible

Data apply for a motor cable length ≤ 10 m. Maximum permissible motor cable length 30 m.

Device	Switching frequency power stage	Ambient temperature	Overload capacity 480 V AC					
			Rated current	Peak current [A_{eff}] at rotating field frequency increasing linearly			Overload factor ≤5 Hz	For time [1)]
	[kHz]	max. [°C]	I_N [A_{eff}]	0 Hz	Up to 5 Hz	> 5 Hz	[%]	[s]
S024.012 BG5	4	45	11	26.5	33		200 (300)	10 (0.1)
	8	40	10	15	24		200 (240)	10 (0.1)
	16	40	7.5	7.5	12		150 (160)	10 (0.1)
S024.016 BG5	4	45	20	30.5	60		200 (300)	10 (0.1)
	8	40	14	16.2	29.4		200 (210)	10 (0.1)
	16	40	6	6.8	10.2		160 (170)	10 (0.1)

1) Shutdown as per I^2t characteristic

Data apply for a motor cable length ≤ 10 m. Maximum permissible motor cable length 30 m.

2.5 Ambient conditions, ServoOne junior

Ambient conditions	
Degree of protection	IP20 with the exception of the heat sink fan in the SO24.0XX BG5 (IP10) and the terminals (IP00)
Health and safety regulations	As per the local regulations (in Germany e.g. BGV V3)
Installation altitude	Up to 1000 m above MSL, over 1000 m above MSL with power reduction (1% per 100 m, max. 2000 m above sea level)
Pollution degree	2
Type of mounting	Built-in unit, only for vertical mounting in a switch cabinet with min. degree of protection IP4x, if STO safety function used min. IP54

Climatic conditions		
In transit	As per EN 61800-2, IEC 60721-3-2 class 2K3 [1]	
	Temperature	-25 °C to +70 °C
	Relative atmospheric humidity	95% at max. +40 °C
In storage	As per EN 61800-2, IEC 60721-3-1 class 1K3 and 1K4 [2]	
	Temperature	-25 °C to +55 °C
	Relative atmospheric humidity	5 to 95%
In operation	As per EN 61800-2, IEC 60721-3-3 class 3K3 [3]	
	Temperature	-10 °C to +45 °C (4 kHz), up to 55 °C with power reduction (2%/°C) -10 °C to +40 °C (8, 16 kHz), up to 55 °C with power reduction (2%/°C)
	Relative atmospheric humidity	5 to 85% without condensation

1) *The absolute humidity is limited to max. 60 g/m³. This means, at 70 °C for example, that the relative atmospheric humidity may only be max. 40%.*

2) *The absolute humidity is limited to max. 29 g/m³. So the maximum values for temperature and relative atmospheric humidity stipulated in the table must not occur simultaneously.*

3) *The absolute humidity is limited to max. 25 g/m³. That means that the maximum values for temperature and relative atmospheric humidity stipulated in the table must not occur simultaneously.*

Mechanical conditions			
Vibration limit in transit	As per EN 61800-2, IEC 60721-3-2 class 2M1		
	Frequency [Hz]	**Amplitude [mm]**	**Acceleration [m/s²]**
	2 ≤ f < 9	3.5	Not applicable
	9 ≤ f < 200	Not applicable	10
	200 ≤ f < 500	Not applicable	15
Shock limit in transit	As per EN 61800-2, IEC 60721-3-2 class 2M1		
	Drop height of packed device max. 0.25 m		
Vibration limits for the system [1]	As per EN 61800-2, IEC 60721-3-3 class 3M1		
	Frequency [Hz]	Amplitude [mm]	Acceleration [m/s²]
	2 ≤ f < 9	0.3	Not applicable
	9 ≤ f < 200	Not applicable	1

1) *Note:*
The devices are only designed for stationary use.
The drive controllers must not be installed in areas where they would be permanently exposed to vibration.

2.6 Acceptance, ServoOne junior

CE marking

The ServoOne junior conform to the requirements of the Low Voltage Directive 2006/95/EC and the product standard EN 61800-5-1.

The servocontrollers thus conform to the requirements for installation in a machine or plant under the terms of the Machinery Directive 2006/42/EC.

The servocontrollers are accordingly CE marked. The CE marking on the rating plate indicates conformity with the above directives.

UL/UR approval

The ServoOne junior servocontrollers have the following approvals:

Servocontroller	Approval
S022.003.xxxx.xxxx.x	UR
S022.006.xxxx.xxxx.x	UL
S022.008.xxxx.xxxx.x	UL
S024.002.xxxx.xxxx.x	UR
S024.004.xxxx.xxxx.x	UL
S024.007.xxxx.xxxx.x	UL
S024.012.xxxx.xxxx.x	UL
S024.016.xxxx.xxxx.x	UL
For details see document "UL-Certification" 0927.01B.x-xx	

EMC acceptance

All ServoOne junior models are by design resilient to interference in accordance with EN 61800-3, environment classes 1 and 2.

To limit conducted interference emissions to the permissible level, external EMC mains filters are available see *"Mains filters, ServoOne junior" on page 162*. The use of these mains filters ensures compliance with the EMC Directive 2004/108/EC:

- Public low-voltage network
  "first environment" (residential C2) up to 10 m motor cable length
- Industrial low-voltage network:
  "second environment" (industrial C3) up to 30 m motor cable length

STO acceptance

The "STO" (Safe Torque Off) safety function integrated into the ServoOne junior is certified according to the following requirements:

- EN 61800-5-2
- EN ISO 13849-1 "PL e"
- EN 61508 / EN 62061 "SIL3"

Acceptance was undertaken by the accredited certification body "TÜV Rheinland".

2.7 Technical data, ServoOne junior BG2

Type SO22.003

SO2_.___.□□□□.□□□□

Rated current

Mains voltage

Article designation

Technical data / Article designation	SO22.003	SO24.002
Output, motor side		
Voltage	3-phase U_{Mains}	
Rated current, effective (I_N) [1]	3 A	2 A [2]
Peak current	See Table 2.1	See Table 2.1
Rotating field frequency		
Switching frequency of the power stage	4, 8, 16 kHz	
Input, mains side		
Mains voltage (U_{Mains})	(1 x 230 V AC / 3 x 230 V AC) -20%/+15%	(3 x 400 V AC / 3 x 460 V AC / 3 x 480 V AC) ±10%
Device connected load (with mains choke)	1.3 kVA	1.5 kVA
Current (with mains choke)	5.4 A (1 x 230 V AC) 3.3 A (3 x 230 V AC)	2.2 A [2]
Asymmetry of the mains voltage	±3% max. (at 3 x 230 V AC)	±3% max.
Frequency	50/60 Hz ±10%	
Power dissipation at 8 kHz and I_N	75 W	42 W [2]
DC link		
Capacitance	880 µF	220 µF
Brake chopper switch-on threshold	390 V DC	650 V DC [2]
Minimum ohmic resistance of an externally installed braking resistor	72 Ω	230 Ω
Brake chopper peak power with external braking resistor [3]	2.1 kW	1.8 kW
Internal braking resistor	550 Ω (PTC)	7500 Ω (PTC)
Brake chopper continuous power with internal braking resistor [3]	0 W	0 W
Brake chopper peak power with internal braking resistor [3]	400 W	200 W [2]

1) Value referred to 4 kHz and 8 kHz switching frequency

2) Value referred to 400 V AC mains voltage

3) A braking resistor is always integrated; connection of an external resistor is permissible.

2.8 Mechanical data, ServoOne junior BG2

Mechanics	S022.003	S024.002
Cooling method	Wall mounting	
Degree of protection	IP20 except terminals (IP00)	
Cooling air temperature	Max. 45 °C (at 4 kHz power stage switching frequency)	
Weight	1.0 kg	
Mounting method	Vertical mounting with unhindered air flow	
Row mounting of multiple servocontrollers	Direct butt mounting	
Dimensions	**BG2 [mm]**	
B (width)	55	
H (height)	210	
T (depth)	142 (without terminals)	
A	27.5	
C / C1	225 / 5	
D Ø	4.8	
H1 / H2	235 / 12.5	

Dimensional drawings, BG2

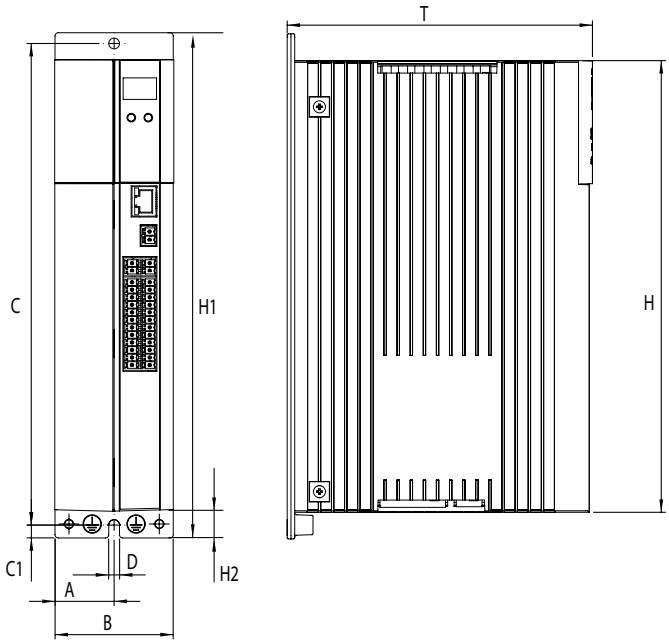

2.8.1 Matching accessories (see chapter 9 f.)

Controller	S022.003	S024.002
Mains choke	LR 32.14-UR (1 x 230 V) LR 34.4-UR (3 x 230 V)	LR 34.4-UR
Braking resistor (ext.)	BR-090.01.540-UR (35 W) BR-090.02.540-UR (150 W) BR-090.03.540-UR (300 W)	BR-260.01.540-UR (35 W) BR-260.02.540-UR (150 W)
Mains filter	EMC8.2-1Ph,UR (1 x 230 V) EMC5.2-3Ph,UR (3 x 230 V)	EMC5.2-3Ph,UR

2.9 Technical data, ServoOne junior BG3

Type SO24.004

SO2_.___.□□□□.□□□□

Rated current

Mains voltage

Article designation

Technical data / Article designation	SO22.006	SO24.004
Output, motor side		
Voltage	3-phase U_{Mains}	
Rated current, effective (I_N) [1]	5.9 A	3.5 A [2]
Peak current	See Table 2.1	See Table 2.1
Rotating field frequency	0 ... 400 Hz	
Switching frequency of the power stage	4, 8, 16 kHz	
Input, mains side		
Mains voltage (U_{Mains})	(1 x 230 V AC / 3 x 230 V AC) -20%/+15%	(3 x 400 V AC / 3 x 460 V AC / 3 x 480 V AC) ±10%
Device connected load (with mains choke)	2.6 kVA	2.7 kVA
Current (with mains choke)	10.6 A (1 x 230 V) 6.5 A (3 x 230 V)	3.9 A [2]
Asymmetry of the mains voltage	±3% max. (at 3 x 230 V AC)	±3% max.
Frequency	50/60 Hz ±10%	
Power dissipation at 8 kHz and I_N	150 W	80 W [2]
DC link		
Capacitance	1320 µF	330 µF
Brake chopper switch-on threshold	390 V DC	650 V DC [2]
Minimum ohmic resistance of an externally installed braking resistor	72 Ω	180 Ω
Brake chopper peak power with external braking resistor	2.1 kW	2.3 kW
Option: internal braking resistor	100 Ω	420 Ω
Brake chopper continuous power with internal braking resistor	Dependent on the effective load on the controller in the corresponding application	
Brake chopper peak power with internal braking resistor	1500 W	1000 W [2]

1) Data referred to 4 kHz and 8 kHz switching frequency

2) Data referred to 400 V mains voltage

2.10 Mechanical data, ServoOne junior BG3

Mechanics	S022.006	S024.004
Cooling method	Wall mounting	
Degree of protection	IP20 except terminals (IP00)	
Cooling air temperature	Max. 45 °C (at 4 kHz power stage switching frequency)	
Weight	1.5 kg	
Mounting method	Vertical mounting with unhindered air flow	
Row mounting of multiple servocontrollers	Direct butt mounting	
Dimensions	**BG3 [mm]**	
B (width)	55	
H (height)	210	
T (depth)	189 (without terminals)	
A	27.5	
C / C1	225 / 5	
D Ø	4.8	
H1 / H2	235 / 12.5	

Dimensional drawings, BG3

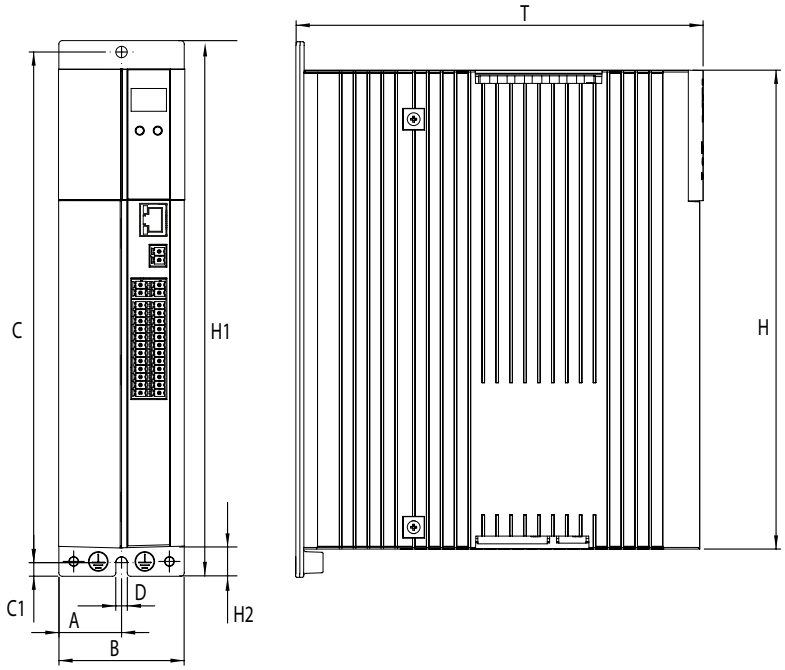

2.10.1 Matching accessories (see chapter 9 f.)

Controller	S022.006	S024.004
Mains choke	LR 32.14-UR (1 x 230 V) LR 34.8-UR (3 x 230 V)	LR 34.6-UR
Braking resistor (ext.)	BR-090.01.540-UR (35 W) BR-090.02.540-UR (150 W) BR-090.03.540-UR (300 W) BR-090.10.650-UR (1000 W)	BR-200.01.540-UR (35 W) BR-200.02.540-UR (150 W) BR-200.03.540-UR (300 W)
Mains filter	EMC14.2-1Ph,UR (1 x 230 V) EMC11.2-3Ph,UR (3 x 230 V)	EMC5.2-3Ph,UR

2.11 Technical data, ServoOne junior BG4

Type SO24.007

SO2_.___.□□□□.□□□□

Rated current

Mains voltage

Article designation

Technical data / Article designation	SO22.008	SO24.007
Output, motor side		
Voltage	3-phase U_{Mains}	
Rated current, effective (I_N) [1]	8.0 A	6.5 A [2]
Peak current	See Table 2.1	See Table 2.2 and Table 2.3
Rotating field frequency	0 ... 400 Hz	
Switching frequency of the power stage	4, 8, 16 kHz	
Input, mains side		
Mains voltage (U_{Mains})	(1 x 230 V AC / 3 x 230 V AC) -20%/+15%	(3 x 400 V AC / 3 x 460 V AC / 3 x 480 V AC) ±10%
Device connected load (with mains choke)	3.5 kVA	5.0 kVA
Current (with mains choke)	14.4 A (1 x 230 V) 8.8 A (3 x 230 V)	7.2 A [2]
Asymmetry of the mains voltage	±3% max. (at 3 x 230 V AC)	±3% max.
Frequency	50/60 Hz ±10%	
Power dissipation at 8 kHz and I_N	200 W	150 W [2]
DC link		
Capacitance	1760 µF	440 µF
Brake chopper switch-on threshold	390 V DC	650 V DC [2]
Minimum ohmic resistance of an externally installed braking resistor	72 Ω	72 Ω
Brake chopper peak power with external braking resistor	2.1 kW	5.9 kW
Option: internal braking resistor	90 Ω	90 Ω
Brake chopper continuous power with internal braking resistor	Dependent on the effective load on the controller in the corresponding application	
Brake chopper peak power with internal braking resistor	1.7 kW	4.7 kW [2]

1) *Data referred to 4 kHz and 8 kHz switching frequency*

2) *Data referred to 400 V mains voltage*

2.12 Mechanical data, ServoOne junior BG4

Mechanics	S022.008	S024.007
Cooling method	Wall mounting	
Degree of protection	IP20 except terminals (IP00)	
Cooling air temperature	Max. 45 °C (at 4 kHz power stage switching frequency)	
Weight	2.8 kg	
Mounting method	Vertical mounting with unhindered air flow	
Row mounting of multiple servocontrollers	Direct butt mounting	
Dimensions	**BG4 [mm]**	
B (width)	55	
H (height)	290	
T (depth)	235.5 (without terminals)	
A / A1	27.5 / 40	
C / C1	305 / 5	
D Ø	4.8	
H1 / H2	315 / 12.5	

Dimensional drawings, BG4

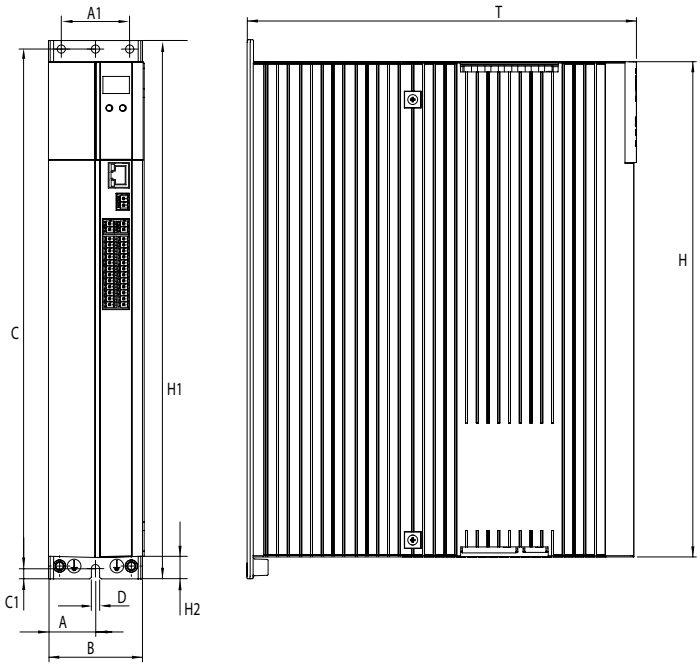

2.12.1 Matching accessories (see chapter 9 f.)

Controller	S022.008	S024.007
Mains choke	LR 32.14-UR (1 x 230 V) LR 34.8-UR (3 x 230 V)	LR 34.8-UR
Braking resistor (ext.)	BR-090.01.540-UR (35 W), BR-090.02.540-UR (150 W) BR-090.03.540-UR (300 W), BR-090.10.650-UR (1000 W)	
Mains filter	EMC14.2-1Ph,UR (1 x 230 V) ***)** EMC11.2-3Ph,UR (3 x 230 V)	EMC11.2-3Ph,UR

**) Can only be used together with mains choke LR32.14-UR*

2.13 Technical data, ServoOne junior BG5

Type SO24.016

SO2_.___.□□□□.□□□□

Rated current

Mains voltage

Article designation

Technical data / Article designation	SO24.012	SO24.016
Output, motor side		
Voltage	3-phase U_{Mains}	
Rated current, effective (I_N) [1]	12.0	16.0
Peak current	See Table 2.2 and Table 2.3	See Table 2.2 and Table 2.3
Rotating field frequency	0 ... 400 Hz	
Switching frequency of the power stage	4, 8, 16 kHz	
Input, mains side		
Mains voltage (U_{Mains})	(3 x 400 V AC / 3 x 460 V AC / 3 x 480 V AC) ±10%	
Device connected load (with mains choke)	9.1 kVA	12.2 kVA
Current (with mains choke)	13.2 A	17.6 A
Asymmetry of the mains voltage	±3% max.	±3% max.
Frequency	50/60 Hz ±10%	
Power dissipation at 8 kHz and I_N	263 W [1] [2]	316 W [1] [2]
DC link		
Capacitance	680 µF	1120 µF
Brake chopper switch-on threshold	650 V DC [2]	650 V DC [2]
Minimum ohmic resistance of an externally installed braking resistor	35 Ω	25 Ω
Brake chopper peak power with external braking resistor	12.1 kW [2]	16.9 kW [2]
Option: internal braking resistor	90 Ω	90 Ω
Brake chopper continuous power with internal braking resistor	Dependent on the effective load on the controller in the corresponding application	
Brake chopper peak power with internal braking resistor	4.7 kW [2]	4.7 kW [2]

1) Data referred to 8 kHz switching frequency

2) Data referred to 400 V mains voltage

2.14 Mechanical data, ServoOne junior BG5

Mechanics	S024.012	S024.016
Cooling method	Wall mounting	
Degree of protection	IP20 except terminals (IP00), fan opening (IP10)	
Cooling air temperature	Max. 45 °C (at 4 kHz power stage switching frequency)	
Weight	5.5 kg	5.9 kg
Mounting method	Vertical mounting with unhindered air flow	
Row mounting of multiple servocontrollers	Direct butt mounting	
Dimensions	**BG5 [mm]**	
B (width)	90	
H (height)	291	
T (depth)	235.5 (without terminals)	
A / A1	20/50	
C / C1	313/6	
D Ø	4.8	
H1 / H2	324/13	

Dimensional drawings - BG5

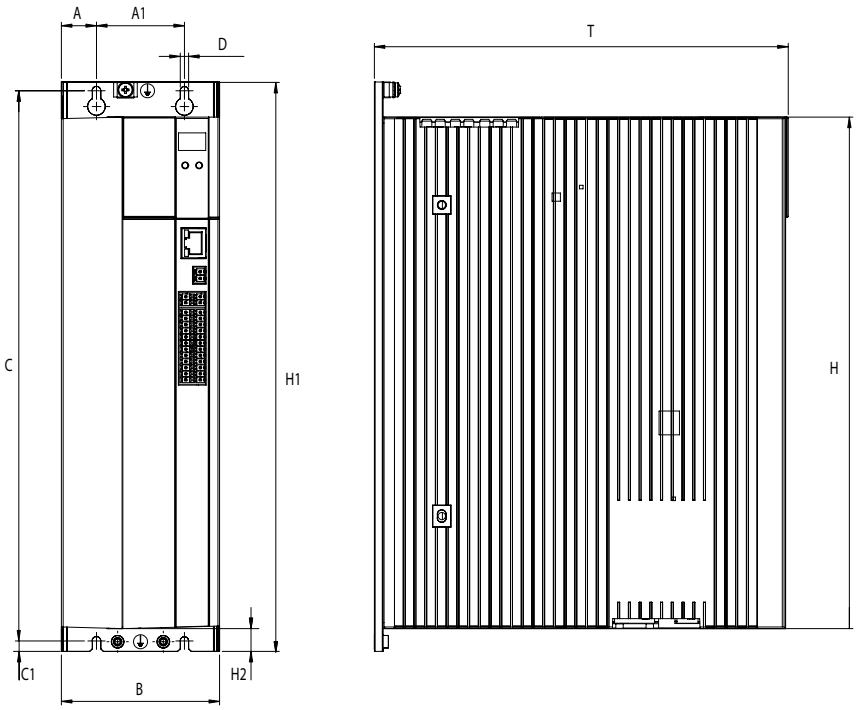

2.14.1 Matching accessories (see chapter 9 f.)

Controller	S024.012	S024.016
Mains choke	LR 34.14-UR	LR 34.17-UR
Braking resistor (ext.)	BR-090.01.540-UR (35 W) BR-090.02.540-UR (150 W) BR-090.03.540-UR (300 W) BR-090.10.650-UR (1000 W)	
Mains filter	EMC16.2-3PH, UR	EMC25.2-3PH, UR

Space for your notes

3 ServoOne single-axis system

3.1 Overview

Supply voltage 1 x 230 V

Type	Size	Rated current	Current carrying capacity	Technical data
S082.004.0	BG1	4.0 A	Tabelle 3.1	auf Seite 56

Supply voltage 3 x 400 V

Type	Size	Rated current		Current carrying capacity	Technical data
		Air cooling	Liquid cooling		
S084.004.0	BG1	4.0 A	-	Tabelle 3.2	auf Seite 56
S084.006.0		6.0 A	-		
S084.008.0	BG2	8.0 A	-	Tabelle 3.2	auf Seite 58
S084.012.0		12 A	-		
S084.016.0	BG3	16 A	16 A	Tabelle 3.2 and Tabelle 3.7	auf Seite 60
S084.020.0		20 A	20 A		
S084.024.0	BG4	24 A	24 A	Tabelle 3.2 and Tabelle 3.7	auf Seite 62
S084.032.0		32 A	32 A		
S084.045.0	BG5	45 A	53 A	Tabelle 3.3 and Tabelle 3.8	auf Seite 64
S084.060.0		60 A	70 A		
S084.072.0		72 A	84 A		
S084.090.0	BG6	90 A	110 A	Tabelle 3.5 and Tabelle 3.11	auf Seite 66
S084.110.0		110 A	143 A		
S084.143.0	BG6a	143 A	170 A	Tabelle 3.6 and Tabelle 3.11	auf Seite 68
S084.170.0		170 A	210 A		
S084.250.0	BG7	-	250 A	Tabelle 3.12 and Tabelle 3.13	auf Seite 70
S084.325.0		-	325 A		
S084.450.0		-	450 A		

3.2 Order codes, ServoOne single-axis system

Article designation	SO8	4	.	006	.	0	0	2	1	.	0	0	0	0	.	X
ServoOne																
Supply voltage	3 x 400 V 1 x 230 V	4 2														
Rated current	BG1	4 A 6 A		004 006												
	BG2	8 A 12 A		008 012												
	BG3	16 A 20 A		016 020												
	BG4	24 A 32 A		024 032												
	BG5	45 A 60 A 72 A		045 060 072												
	BG6 BG6a	90 A 110 A 143 A 170 A		090 110 143 170												
	BG7	250 A 325 A 450 A		250 325 450												
Mains supply	AC					0										
Safety technology	STO Integrated safety control [1]						0 1									
Option 1 Communication	Not included Sercos II PROFIBUS EtherCAT CANopen CANopen + 2 AO PROFINET IRT Sercos III Powerlink[2]							0 1 2 3 4 5 7 8 9								
Option 2 Technology	Not included Second SinCos encoder TTL encoder simulation / TTL master encoder TwinSync communication SSI encoder simulation TTL encoder with commutation signals Multi-IO (analogue and digital) expansion (M19) Digital input/output (DIO) Second safe SinCos encoder Second safe SSI encoder Second safe axis monitor (SinCos)								0 1 2 3 4 5 6 8 A B C							
Housing/cooling method	Air-cooled (standard) BG1...BG6-6a Air-cooled with int. braking resistor BG1...BG6-6a Liquid-cooled with int. braking resistor from BG5 ... BG7 Liquid-cooled from BG5 ... BG7, BG3 ... BG4 upon request [3]										0 1 7 8					
Function package	Basic (without additional function package) iPlc Hydraulic Hydraulic + iPLc HF HF + iPlc											0 1 2 3 7 8				
Special design	None												0			
Protection	Standard PCBs with protective varnish (from SO84.045 standard)													0 1		
Hardware version	(May be multi-digit)															X

1) FS certification BG1 to BG5 2) Upon request 3) Not possible for BG3+4 with intgr. safety control

3.3 Features, ServoOne single-axis system

3.3.1 Features, servocontrollers BG1 to BG5

3.3.2 Features, servocontrollers BG6 to BG6a

3.3.3 Features, servocontroller BG7

3.4 Current carrying capacity, ServoOne single-axis system, air cooling

The maximum permissible drive controller output current and the peak current are dependent on the mains voltage, the motor cable length, the power stage switching frequency, the design of the cooling and the ambient temperature. If the conditions change, the maximum permissible current carrying capacity of the drive controllers also changes.

Current carrying capacity, SO82.004 air cooling, single-phase)

Drive controller	Switching frequency of the power stage	Ambient temperature	At mains voltage 1 x 230 VAC				For time [1]
			Rated current	Peak current [A_{eff}]			
				At rotating field frequency increasing linearly		For intermittent operation	
	[kHz]	[°C]	[A_{eff}]	0 Hz	5 Hz	>5 Hz	[s]
SO82.004 (BG1)	4	45	4.0	8.0	8.0	8.0	10
	8	40	4.0	8.0	8.0	8.0	
	12		3.7	7.4	7.4	7.4	
	16		2.7	5.4	5.4	5.4	

Data apply for a motor cable length ≤ 10 m

1) Shutdown as per I²t characteristic

Table 3.1 Rated and peak current, BG1 (air cooling, one-phase)

Current carrying capacity, BG1-BG4, air cooling, three-phase

Drive controller	Switching frequency of the power stage	Ambient temperature	At mains voltage 400 V		At mains voltage 460 V		At mains voltage 480 V		Overload factor ≥ 5 Hz	For time [1]
			Rated current	Peak current [A_{eff}]	Rated current	Peak current [A_{eff}]	Rated current	Peak current [A_{eff}]		
	[kHz]	[°C]	[A_{eff}]	0 Hz to ≥5 Hz	[A_{eff}]	0 Hz to ≥5 Hz	[A_{eff}]	0 Hz to ≥5 Hz	[%]	[s]
SO84.004 (BG1)	4	45 [2]	4.0	8.0	4.0	8.0	4.0	8.0	200	10
	8	40	4.0	8.0	4.0	8.0	4.0	8.0		
	12		3.7	7.4	2.9	5.8	2.7	5.4		
	16		2.7	5.4	1.6	3.2	1.3	2.6		
SO84.006 (BG1)	4	45 [2]	6.0	12.0	6.0	12.0	6.0	12.0	200	10
	8	40	6.0	12.0	6.0	12.0	6.0	12.0		
	12		5.5	11.0	4.4	8.8	4.0	8.0		
	16		4.0	8.0	2.4	4.8	1.9	3.8		
SO84.008 (BG2)	4	45	8.0	16.0	8.0	16.0	8.0	16.0	200	10
	8	40	8.0	16.0	7.2	14.4	6.9	13.8		
	12		6.7	13.4	5.3	10.6	4.9	9.8		
	16		5.0	10.0	3.7	7.4	3.3	6.6		

All data apply for a motor cable length ≤ 10 m.

1) Shutdown as per I²t characteristic

2) For SO84 BG1-Safety only approved up to 40 °C.

Table 3.2 Rated and peak current, BG1 to BG4 (air cooling, three-phase)

Drive controller	Switching frequency of the power stage	Ambient temperature	At mains voltage 400 V		At mains voltage 460 V		At mains voltage 480 V		Overload factor ≥ 5 Hz	For time 1)
			Rated current	Peak current [A_{eff}]	Rated current	Peak current [A_{eff}]	Rated current	Peak current [A_{eff}]		
	[kHz]	[°C]	[A_{eff}]	0 Hz to ≥5 Hz	[A_{eff}]	0 Hz to ≥5 Hz	[A_{eff}]	0 Hz to ≥5 Hz	[%]	[s]
S084.012 (BG2)	4	45	12.0	24.0	12.0	24.0	12.0	24.0	200	10
	8	40	12.0	24.0	10.8	21.6	10.4	20.8		
	12		10.0	20.0	8.0	16.0	7.4	14.8		
	16		7.6	15.2	5.6	11.2	5.0	10		
S084.016 (BG3)	4	45	16.0	32.0	16.0	32.0	16.0	32.0	200	10
	8	40	16.0	32.0	13.9	27.8	13.3	26.6		
	12		11.0	22.0	8.8	17.6	8.0	16.0		
	16		8.0	16.0	5.9	11.8	5.2	10.4		
S084.020 (BG3)	4	45	20.0	40.0	20.0	40.0	20.0	40.0	200	10
	8	40	20.0	40.0	17.4	34.8	16.6	33.2		
	12		13.8	27.6	11.0	22.0	10.0	20.0		
	16		10.0	20.0	7.4	14.8	6.5	13.0		
S084.024 (BG4)	4	45	24.0	48.0	24.0	48.0	24.0	48.0	200	10
	8	40	24.0	48.0	21.0	42.0	20.0	40.0		
	12		15.8	31.6	12.4	24.8	11.3	22.6		
	16		11.3	22.6	9.2	18.4	8.4	16.8		
S084.032 (BG4)	4	45	32.0	64.0	32.0	64.0	32.0	64.0	200	10
	8	40	32.0	64.0	28.0	56.0	26.7	53.4		
	12		21.0	42.0	16.5	33.0	15.0	30.0		
	16		15.0	30.0	12.2	24.4	11.2	22.4		

All data apply for a motor cable length ≤ 10 m.

1) Shutdown as per I^2t characteristic

2) For SO84 BG1-Safety only approved up to 40 °C.

Table 3.2 Rated and peak current, BG1 to BG4 (air cooling, three-phase)

3.4.1 Current carrying capacity, BG5, air cooling, three-phase

Drive controller	Power stage switching frequency	Ambient temperature	At mains voltage 400 V				At mains voltage 460 V				Overload factor ≥ 5 Hz	For time 1)
			Rated current	Peak current [A_{eff}] at rotating field frequency increasing linearly 2)			Rated current	Peak current [A_{eff}] at rotating field frequency increasing linearly 2)				
	[kHz]	[°C]	[A_{eff}]	0 Hz	Up to 5 Hz	≥5 Hz	[A_{eff}]	0 Hz	Up to 5 Hz	≥5 Hz	[%]	[s]
S084.045 (BG5)	4	45	45	90	90		42	83	84		200	3/10 3)
	8	40	45	90	90		42	83	84			
	12	40	45	90	90		42	83	84			
	16	40	42	84	84		39	78	78			
S084.060 (BG5)	4	45	60	120	120		56	111	112		200	3/10 3)
	8	40	60	120	120		56	111	112			
	12	40	58	116	116		54	107	108			
	16	40	42	84	84		39	78	78			
S084.072 (BG5)	4	45	72	144	144		67	133	134		200	3/10 3)
	8	40	72	144	144		67	133	134			
	12 4)	40	58	116	116		54	107	108			
	16 4)	40	42	84	84		39	78	78			

All data apply for a motor cable length ≤ 10 m.

1) Shutdown as per I²t characteristic

2) Permissible peak current at max. 70% initial load

3) 10 s at heat sink temperature <45 °C

4) For S084 BG5-Safety only allowed up to 8 kHz

Table 3.3 Rated and peak current, BG5 (air cooling)

Drive controller	Power stage switching frequency	Ambient tempera-ture	At mains voltage 480 V				Overload factor ≥ 5 Hz	For time 1)
			Rated current	Peak current [A_{eff}] at rotating field frequency increasing linearly 2)				
	[kHz]	[°C]	[A_{eff}]	0 Hz	Up to 5 Hz	≥5 Hz	[%]	[s]
S084.045 (BG5)	4	45	41	81	82		200	3/10 3)
	8	40	41	81	82			
	12	40	41	81	82			
	16	40	38	76	76			
S084.060 (BG5)	4	45	54	108	108		200	3/10 3)
	8	40	54	108	108			
	12	40	52	104	104			
	16	40	38	76	76			
S084.072 (BG5)	4	45	65	130	130		200	3/10 3)
	8	40	65	130	130			
	12 4)	40	52	104	104			
	16 4)	40	38	76	76			

All data apply for a motor cable length ≤ 10 m.

1) Shutdown as per I²t characteristic

2) Permissible peak current at max. 70% initial load

3) 10 s at heat sink temperature <45 °C

4) For S084 BG5-Safety only allowed up to 8 kHz

3.4.2 Current carrying capacity, BG6/6a, air-cooled, three-phase

Drive controller	Power stage switching frequency	Ambient temperature	At mains voltage 400 V				At mains voltage 460 V				Overload factor ≥ 5 Hz	For time 1)
			Rated current	Peak current [A_{eff}] 2) At rotating field frequency increasing linearly			Rated current	Peak current [A_{eff}] 2) At rotating field frequency increasing linearly				
	[kHz]	[°C]	[A_{eff}]	0 Hz	Up to 5 Hz	≥5 Hz	[A_{eff}]	0 Hz	Up to 5 Hz	≥5 Hz	[%]	[s]
S084.090 (BG6)	4	45	90	170	180		83	157	166		200	30
	8	40	90	134	180		83	124	166		200	
	12	40	90	107	144		83	99	133		160	
	16	40	72	86	115		67	80	107		160	
S084.110 (BG6)	4	45	110	170	220		102	157	204		200	30
	8	40	110	134	165		102	124	153		150	
	12	40	90	107	144		83	99	133		160	
	16	40	72	86	115		67	80	107		160	
S084.143 (BG6a)	4	45	143	191	286		132	176	264		200	30
	8	40	143	152	215		132	140	198		150	
	12	40	115	122	173		106	112	159		150	
	16	40	92	98	138		85	91	128		150	
S084.170 (BG6a)	4	45	170	191	323		157	176	298		190	10
	8	40	170	152	221		157	140	204		130	
	12	40	136	122	163		126	112	151		120	
	16	40	109	98	131		101	91	121		120	

All data apply for a motor cable length ≤ 10 m.

1) Shutdown as per I²t characteristic

2) Permissible peak current at max. 70% initial load

3) 10 s at heat sink temperature <45 °C

Table 3.4 Rated and peak current, BG6 and BG6a (air cooling)

Drive controller	Power stage switching frequency [kHz]	Ambient temperature [°C]	At mains voltage 480 V: Rated current [A_{eff}]	Peak current [A_{eff}] 2) At rotating field frequency increasing linearly: 0 Hz	Up to 5 Hz	≥5 Hz	Overload factor ≥ 5 Hz [%]	For time 1) [s]
S084.090 (BG6)	4	45	81	153	162		200	30
	8	40	81	121	162		200	
	12	40	81	95	130		160	
	16	40	65	77	104		160	
S084.110 (BG6)	4	45	99	153	198		200	30
	8	40	99	121	149		150	
	12	40	81	95	130		160	
	16	40	65	77	104		160	
S084.143 (BG6a)	4	45	129	170	258		200	30
	8	40	129	136	194		150	
	12	40	104	109	156		150	
	16	40	83	87	125		150	
S084.170 (BG6a)	4	45	153	170	291		190	10
	8	40	153	136	199		130	
	12	40	122	109	146		120	
	16	40	98	87	118		120	

All data apply for a motor cable length ≤ 10 m.

1) Shutdown as per I^2t characteristic

2) Permissible peak current at max. 70% initial load

3) 10 s at heat sink temperature <45 °C

3.4.3 Current carrying capacity, ServoOne single-axis system, liquid cooling

Current carrying capacity, BG3-BG4, liquid cooling

Drive controller	Switching frequency of the power stage	Ambient temperature	At mains voltage 400 V		At mains voltage 460 V		Overload factor ≥ 5 Hz	For time 1)
			Rated current	Peak current [A_{eff}] 2)	Rated current	Peak current [A_{eff}] 2)		
	[kHz]	[°C]	[A_{eff}]	0 Hz to ≥5 Hz	[A_{eff}]	0 Hz to ≥5 Hz	[%]	[s]
S084.016 (BG3)	4	45	16.0	32.0	16.0	32.0	200	10
	8	40	16.0	32.0	13.9	27.8		
	12		11.0	22.0	8.8	17.6		
	16		8.0	16.0	5.9	11.8		
S084.020 (BG3)	4	45	20.0	40.0	20.0	40.0	200	10
	8	40	20.0	40.0	17.4	34.8		
	12		13.8	27.6	11.0	22.0		
	16		10.0	20.0	7.4	14.8		
S084.024 (BG4)	4	45	24.0	48.0	24.0	48.0	200	10
	8	40	24.0	48.0	21.0	42.0		
	12		15.8	31.6	12.4	24.8		
	16		11.3	22.6	9.2	18.4		
S084.032 (BG4)	4	40	32.0	64.0	32.0	64.0	200	10
	8		32.0	64.0	28.0	56.0		
	12		21.0	42.0	16.5	33.0		
	16		15.0	30.0	12.2	24.4		

All data apply for a motor cable length ≤10 m. 1) Shutdown as per I^2t characteristic 2) Permissible peak current at max. 70% initial load

Table 3.5 Rated and peak current, BG3 and BG4 (liquid cooling)

NOTE:
BG3 and BG4 devices with safety functionality (SO84.xxx.x**1**) are **not** available in the model with liquid cooling.

Drive controller	Switching frequency of the power stage	Ambient temperature	At mains voltage 480 V		Overload factor ≥ 5 Hz	For time 1)
			Rated current	Peak current [A_{eff}] 2)		
	[kHz]	[°C]	[A_{eff}]	0 Hz to ≥5 Hz	[%]	[s]
S084.016 (BG3)	4	45	16.0	32.0	200	10
	8	40	13.3	26.6		
	12		8.0	16.0		
	16		5.2	10.4		
S084.020 (BG3)	4	45	20.0	40.0	200	10
	8	40	16.6	33.2		
	12		10.0	20.0		
	16		6.5	13.0		
S084.024 (BG4)	4	45	24.0	48.0	200	10
	8	40	20.0	40.0		
	12		11.3	22.6		
	16		8.4	16.8		
S084.032 (BG4)	4	40	32.0	64.0	200	10
	8		26.7	53.4		
	12		15.0	30.0		
	16		11.2	22.4		

Current carrying capacity, BG5, liquid cooling

Drive controller	Power stage switching frequency	Ambient temperature	At mains voltage 400 V				At mains voltage 460 V				Overload factor ≥ 5 Hz	For time 1)
			Rated current	Peak current [A_{eff}] 2) At rotating field frequency increasing linearly			Rated current	Peak current [A_{eff}] 2) At rotating field frequency increasing linearly				
	[kHz]	[°C]	[A_{eff}]	0 Hz	Up to 5 Hz	≥ 5 Hz	[A_{eff}]	0 Hz	Up to 5 Hz	≥5 Hz	[%]	[s]
S084.045 (BG5)	4	45	53	90	90		49	83	83		170	30
	8		53	90	90		49	83	83			
	12		53	90	90		49	83	83			
	16		49	83	83		45	77	77			
S084.060 (BG5)	4	45	70	119	119		65	111	111		170	30
	8		70	119	119		65	111	111			
	12		68	116	116		63	107	107			
	16		49	83	83		45	77	77			
S084.072 (BG5)	4	45	84	143	143		78	133	133		170	30
	8		84	143	143		78	133	133			
	12 4)		68	116	116		63	107	107			
	16 4)		49	83	83		45	77	77			

All data apply for a motor cable length ≤ 10 m.

1) Shutdown as per I^2t characteristic

2) Permissible peak current at max. 70% initial load

4) For S084 BG5-Safety only approved up to 8 kHz.

Table 3.6 Rated and peak current, BG5 (liquid-cooled)

NOTE:

The shutdown temperature for liquid-cooled devices is 65 °C (internally at the heat sink). The drive controller is shut down and is only ready for operation again after a short cooling phase.

Drive controller	Power stage switching frequency [kHz]	Ambient temperature [°C]	At mains voltage 480 V: Rated current [A_{eff}]	Peak current [A_{eff}] 2) At rotating field frequency increasing linearly: 0 Hz	Up to 5 Hz	≥5 Hz	Overload factor ≥ 5 Hz [%]	For time 1) [s]
S084.045 (BG5)	4	45	48	82	82		170	30
	8		48	82	82			
	12		48	82	82			
	16		44	75	75			
S084.060 (BG5)	4	45	63	107	107		170	30
	8		63	107	107			
	12		61	104	104			
	16		44	75	75			
S084.072 (BG5)	4	45	76	129	129		170	30
	8		76	129	129			
	12 4)		61	104	104			
	16 4)		44	75	75			

All data apply for a motor cable length ≤ 10 m.

1) Shutdown as per I^2t characteristic

2) Permissible peak current at max. 70% initial load

4) For S084 BG5-Safety only approved up to 8 kHz.

3.4.4 Current carrying capacity, BG6, 6a liquid cooling

Drive controller	Power stage switching frequency	Ambient temperature	At mains voltage 400 V				At mains voltage 460 V				Overload factor ≥ 5 Hz	For time 1)
			Rated current	Peak current [A_{eff}] 2) At rotating field frequency increasing linearly			Rated current	Peak current [A_{eff}] 2) At rotating field frequency increasing linearly				
	[kHz]	[°C]	[A_{eff}]	0 Hz	Up to 5 Hz	≥5 Hz	[A_{eff}]	0 Hz	Up to 5 Hz	≥5 Hz	[%]	[s]
S084.090 (BG6)	4	45	110	206	220		102	191	204		200	30
	8		110	166	187		102	154	173		170	
	12		110	133	165		102	123	153		150	
	16		90	106	135		83	99	125		150	
S084.110 (BG6)	4	45	143	232	286		132	214	264		200	30
	8		143	192	215		132	177	198		150	
	12		114	153	171		105	142	158		150	
	16		91	123	137		84	114	126		150	
S084.143 (BG6a)	4	45	170	232	340		157	214	314		200	10
	8		170	192	255		157	177	236		150	
	12		136	153	204		126	142	189		150	
	16		109	123	164		101	114	152		150	
S084.170 (BG6a)	4	45	210	232	340		194	214	314		160	10
	8		210	192	255		194	177	236		120	
	12		168	153	204		155	142	189		120	
	16		134	123	164		124	114	152		120	

All data apply for a motor cable length ≤10 m. 1) Shutdown as per I^2t characteristic 2) Permissible peak current at 70% initial load

Table 3.7 Rated and peak current, BG6 and BG6a (liquid cooling)

Drive controller	Power stage switching frequency [kHz]	Ambient temperature [°C]	At mains voltage 480 V: Rated current [A_{eff}]	Peak current [A_{eff}] 2) At rotating field frequency increasing linearly: 0 Hz	Up to 5 Hz	≥5 Hz	Overload factor ≥ 5 Hz [%]	For time 1) [s]
S084.090 (BG6)	4	45	99	186	198		200	30
	8		99	150	168		170	
	12		99	120	149		150	
	16		81	96	122		150	
S084.110 (BG6)	4	45	129	208	258		200	30
	8		129	172	194		150	
	12		103	138	155		150	
	16		82	111	123		150	
S084.143 (BG6a)	4	45	153	208	306		200	10
	8		153	172	230		150	
	12		122	138	183		150	
	16		98	111	147		150	
S084.170 (BG6a)	4	45	189	208	306		160	10
	8		189	172	230		120	
	12		151	138	183		120	
	16		121	111	147		120	

All data apply for a motor cable length ≤10 m. 1) Shutdown as per I^2t characteristic 2) Permissible peak current at 70% initial load

3.4.5 Current carrying capacity, BG7, liquid cooling

NOTE:

Axis controllers with power stage switching frequencies from 8 to 16 kHz are devices with the "HF function package" (incl. an HF parameter data set) with a rotating field frequency up to 1600 Hz.

Drive controller	Function package	Power stage switching frequency	Ambient temperature	At mains voltage 400 V				At mains voltage 460 V				Overload factor ≥5 Hz	For time 1)
				Rated current	Peak current [A_{eff}] 2) At rotating field frequency increasing linearly			Rated current	Peak current [A_{eff}] 2) At rotating field frequency increasing linearly				
		[kHz]	[°C]	[A_{eff}]	0 Hz	Up to 5 Hz	≥5 Hz	[A_{eff}]	0 Hz	Up to 5 Hz	≥5 Hz	[%]	[s]
S084.250 (BG7)	Default	2	40	250	425			231	393			170	30
		4		250	375			231	346			150	
	HF*)	8	40	250	250	375		231	231	346			
		12		200	200	300		185	185	277			
		16		175	175	262		162	162	243			
S084.325 (BG7)	Default	2	40	325	552			300	511			170	30
		4		325	487			300	451			150	
	HF*)	8	40	325	325	487		300	300	451			
		12		300	300	450		277	277	417			
		16		270	270	405		250	250	375			
S084.450 (BG7)	Default	2	40	450	765			416	707			170	30
		4		450	675			416	624			150	
	HF*)	8	40	450	450	675		416	416	624			
		12		400	400	600		370	370	555			
		16		x	x			x	x			x	

All data apply for a motor cable length ≤ 10 m.

1) Shutdown as per I^2t characteristic

2) Permissible peak current at max. 70% initial load

X) Not available

*) Model HF = S084.xxx.xxxx.x7 or S084.xxx.xxxx.x8 (For details see „Bestellschlüssel ServoOne Einzelachssystem“ auf Seite 36)

Table 3.8 Rated and peak current, BG7 for standard and HF model (liquid-cooled)

NOTE:

The shutdown temperature for liquid-cooled devices is 90 °C (internally at the heat sink). The drive controller is shut down and is only ready for operation again after a short cooling phase.

Drive controller	Function package	Power stage switching frequency [kHz]	Ambient temperature [°C]	At mains voltage 480 V: Rated current [A_{eff}]	Peak current [A_{eff}] 2) At rotating field frequency increasing linearly: 0 Hz	Up to 5 Hz	≥5 Hz	Overload factor ≥5 Hz [%]	For Time 1) [s]
S084.250 (BG7)	Default	2	40	225	383			170	30
		4		225	338			150	
	HF*)	8	40	225	225	338			
		12		180	180	270			
		16		158	158	237			
S084.325 (BG7)	Default	2	40	293	498			170	30
		4		293	440			150	
	HF*)	8	40	293	293	440			
		12		270	270	405			
		16		243	243	365			
S084.450 (BG7)	Default	2	40	405	689			170	30
		4		405	608			150	
	HF*)	8	40	405	405	608			
		12		360	360	540			
		16		X	X			X	

All data apply for a motor cable length ≤ 10 m.

1) Shutdown as per I^2t characteristic

2) Permissible peak current at max. 70% initial load

X) Not available

*) Model HF = S084.xxx.xxxx.x7 or S084.xxx.xxxx.x8
(For details see „Bestellschlüssel ServoOne Einzelachssystem“ auf Seite 36)

3.5 Ambient conditions, ServoOne single-axis system

Ambient conditions	
Degree of protection	IP20 except terminals (IP00), fan opening BG2 (IP10)
Health and safety regulations	According to local regulations (in Germany e.g. BGV A3)
Installation altitude	Up to 1000 m above MSL, higher with power reduction (1% per 100 m, max. 2000 m above sea level)
Pollution degree	2
Type of mounting	Built-in unit, only for vertical installation in a switch cabinet with min. degree of protection IP4x, if STO safety function used min. IP54.

Climatic conditions			
In transit	As per EN 61800-2, IEC 60721-3-2 class 2K3 [1]		
	Temperature		-25 °C to +70 °C
	Relative atmospheric humidity		95% at max. +40 °C
In storage	As per EN 61800-2, IEC 60721-3-1 class 1K3 and 1K4 [2]		
	Temperature		-25 °C to +55 °C
	Relative atmospheric humidity		5 to 95%
In operation	As per EN 61800-2, IEC 60721-3-3 class 3K3 [3]		
	Temperature	Air cooling	**BG1** -10 °C to +45 °C (4 kHz) -10 °C to +40 °C (8, 12, 16 kHz) **BG2 to BG4** -10 °C to +45 °C (4 kHz), up to 55 °C with power reduction (5%/°C) -10 °C to +40 °C (8, 12, 16 kHz), up to 55 °C with power reduction (4%/°C) **BG5 to BG6a** -10 °C to +45 °C (4 kHz) -10 °C to +40 °C (8, 12, 16 kHz), up to 55 °C with power reduction (2%/°C)
		Liquid cooling	**BG3 and BG4** -10 °C to +45 °C (4 kHz), up to 55 °C with power reduction (5%/°C) -10 °C to +40 °C (8, 12, 16 kHz), up to 55 °C with power reduction (4%/°C) **BG5 to BG6a** -10 °C to +45 °C (4, 8, 12, 16 kHz), up to 55 °C with power reduction (2%/°C) **BG7** -10 °C to +40 °C (2, 4, 8, 12, 16 kHz), up to 55 °C with power reduction (2%/°C)
	Relative atmospheric humidity		5 to 85% without condensation

1) The absolute humidity is limited to max. 60 g/m³. This means, at 70 °C for example, that the relative atmospheric humidity may only be max. 40%.

2) The absolute humidity is limited to max. 29 g/m³. So the maximum values for temperature and relative atmospheric humidity stipulated in the table must not occur simultaneously.

3) The absolute humidity is limited to max. 25 g/m³. That means that the maximum values for temperature and relative atmospheric humidity stipulated in the table must not occur simultaneously.

Mechanical conditions			
Vibration limit in transit	As per EN 61800-2, IEC 60721-3-2 class 2M1		
	Frequency [Hz]	**Amplitude [mm]**	**Acceleration [m/s²]**
	2 ≤ f < 9	3.5	Not applicable
	9 ≤ f < 200	Not applicable	10
	200 ≤ f < 500	Not applicable	15
Shock limit in transit	As per EN 61800-2, IEC 60721-3-2 class 2M1		
	Drop height of packed device max. 0.25 m		
Vibration limits for the system [1]	As per EN 61800-2, IEC 60721-3-3 class 3M1		
	Frequency [Hz]	**Amplitude [mm]**	**Acceleration [m/s²]**
	2 ≤ f < 9	0.3	Not applicable
	9 ≤ f < 200	Not applicable	1

1) Note: The devices are only designed for stationary use. The drive controllers must not be installed in areas where they would be permanently exposed to vibration.

3.6 Acceptance, ServoOne single-axis system

CE marking

The ServoOne servocontrollers conform to the requirements of the Low Voltage Directive 2006/95/EC and the product standard EN 61800-5-1.
The servocontrollers thus conform to the requirements for installation in a machine or plant under the terms of the Machinery Directive 2006/42/EC.
The servocontrollers are accordingly CE marked. The CE marking on the rating plate indicates conformity with the above directives.

UL approval

UL approval has been obtained for the ServoOne single-axis controllers.
For details see docurrent "UL-Certification" 0927.21B.X.

Functional safety acceptance

See chapter 5.

EMC acceptance

All ServoOne single-axis controllers have an aluminium housing with an anodised finish (BG1 to BG4)
or an aluminium rear panel made of galvanised sheet steel (BG5 to BG7) to enhance interference immunity (as per EN 61800-3, environment classes 1 and 2).
To limit conducted interference emissions to the permissible level, the ServoOne single-axis servocontrollers BG1 to BG5 are fitted with integral mains filters. External mains filters are available for ServoOne single-axis controllers BG6 to BG7 (see chapter 9, "Accessories"). This ensures compliance with the EMC Directive 2004/108/EC:

- Public low-voltage network
  "first environment" (residential C2) up to 10 m motor cable length
- Industrial low-voltage network:
  ”second environment” (industrial C3) up to 25 m motor cable length

Additional external mains filters are also available for all single-axis controllers BG1 to BG5 (see chapter 9, "Accessories").

STO acceptance

The "STO" (Safe Torque Off) safety function integrated into the ServoOne servocontroller is certified according to the requirements of

- EN ISO 13849-1 “PL e” and
- EN 61508 / EN 62061 "SIL3".

Acceptance was undertaken by the accredited certification body "TÜV Rheinland".

3.7 Technical data, single-axis system

Technical data, servocontrollers 4 A to 6 A (BG1)

Type SO84.004.0

SO8_.___.□□□□._□□□

- Cooling (0/1 air, 7/8 liquid)
- Rated current
- Mains voltage

Article designation / Technical data	S082.004.0	S084.004.0	S084.006.0
Output, motor side			
Voltage	3-phase U_{Mains}		
Rated current, effective (I_N) 1)	4 A	4 A 2)	6 A 2)
Peak current	See Tabelle 3.1	See Tabelle 3.2	
Rotating field frequency	0 ... 400 Hz		
Switching frequency of the power stage	4, 8, 12, 16 kHz (factory setting 8 kHz at 40 °C cooling air temperature)		
Input, mains side			
Mains voltage (U_{Mains})	1 x 230 V ±10%	(3 x 230 V/3 x 400 V/3 x 460 V/3 x 480 V) ±10%	
Device connected load (with mains choke)	2.2 kVA	2.9 kVA 2)	4.4 kVA 2)
Current (with mains choke)	9.5 A 3)	4.2 A 2)	6.4 A 2)
Asymmetry of the mains voltage	-	±3% max.	
Frequency	50/60 Hz ±10%		
Power dissipation at I_N 1)	85 W	96 W 2)	122 W 2)
DC link			
Capacitance	1740 µF	400 µF	
Brake chopper switch-on threshold	390 V DC	650 V DC 2)	
Minimum ohmic resistance of an externally installed braking resistor 4)	72 Ω		
Brake chopper peak power with external braking resistor	2.1 kW	5.9 kW	
Option: internal braking resistor	PTC		
Brake chopper continuous power with internal braking resistor	Dependent on the effective load on the controller in the corresponding application		
Brake chopper peak power with internal braking resistor	1.7 kW	4.7 kW	

Table 3.9 1) Data referred to 8 kHz switching frequency
Table 3.10 2) Data referred to 3 x 400 V AC mains voltage
Table 3.11 3) Without mains choke
Table 3.12 4) Connection of an external braking resistor not permitted for device variant with internal braking resistor (SO8x.xxx.xxxx.1xxx).

Mechanics, BG1	S082.004.0	S084.004.0	S084.006.0
Cooling method	Air cooling (wall-mounted)		
Degree of protection	IP20 except terminals (IP00)		
Cooling air temperature	Max. 45 °C (at 4 kHz power stage switching frequency)		
Weight	3.4 kg		
Mounting method	Vertical mounting with unhindered air flow		
Row mounting of multiple servocon-trollers	Direct butt mounting		

Dimensions	BG1 [mm]
B (width)	58.5
H (height)	295 (without terminals)
T (depth)	224 (without terminals)
A	29.25
C / C1	344.5 / 5
D Ø	4.8
H1 / H2	355 / 38.5

Dimensional drawings, BG1 air cooling

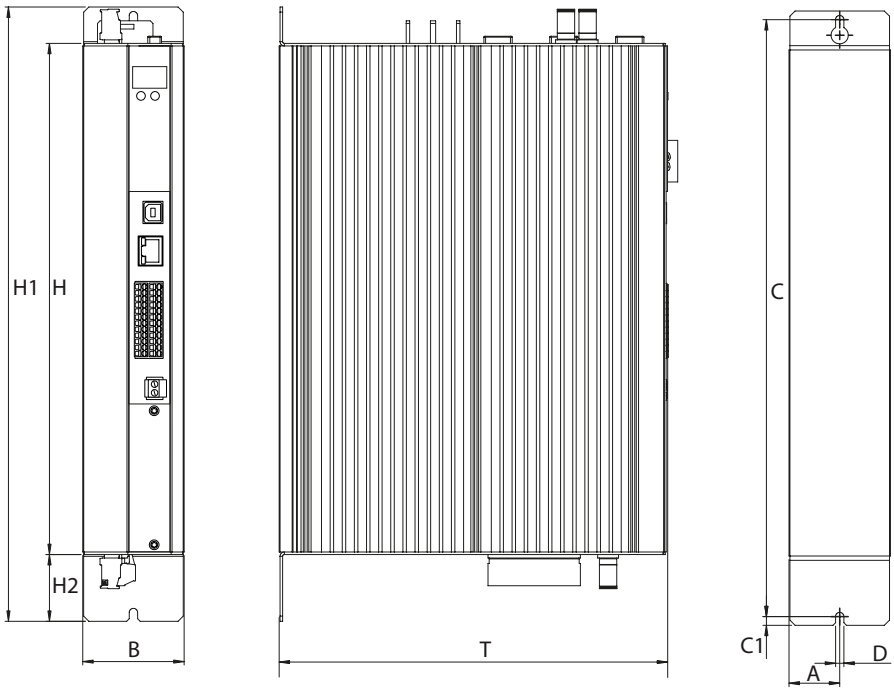

3.7.1 Matching accessories (see chapter 9f.)

Controller	S082.004.0	S084.004.0	S084.006.0
Mains choke	LR32.14-UR	LR34.4-UR	LR34.6-UR
Braking resistor	BR-090.01.540-UR (35 W) BR-090.02.540-UR (150 W) BR-090.03.540-UR (300 W) BR-090.10.650-UR (1000 W)		
Mains filter	-	EMC7.1-UR	EMC7.1-UR

Technical data, servocontrollers 8 A to 12 A (BG2)

Type SO84.008.0

SO8_.___.□□□□._□□□

- Cooling (0/1 air, 7/8 liquid)
- Rated current
- Mains voltage

Technical data / Article designation	SO84.008.0	SO84.012.0
Output, motor side		
Voltage	3-phase U_{Mains}	
Rated current, effective (I_N)	8 A [1]	12 A [1]
Peak current	Tabelle 3.2	
Rotating field frequency	0 ... 400 Hz	
Switching frequency of the power stage	4, 8, 12, 16 kHz (factory setting 8 kHz at 40 °C cooling air temperature)	
Input, mains side		
Mains voltage (U_{Mains})	(3 x 230 V/3 x 400 V/3 x 460 V/3 x 480 V) ±10%	
Device connected load (with mains choke)	6.0 kVA [1]	9.1 kVA [1]
Current (with mains choke)	8.7 A [1]	13.1 A [1]
Asymmetry of the mains voltage	±3% max.	
Frequency	50/60 Hz ±10%	
Power dissipation at I_N	175 W [1]	240 W [1]
DC link		
Capacitance	725 µF	
Brake chopper switch-on threshold	650 V DC [1]	
Minimum ohmic resistance of an externally installed braking resistor [2]	39 Ω	
Brake chopper peak power with external braking resistor	11 kW	
Option: internal braking resistor	90 Ω	
Brake chopper continuous power with internal braking resistor	Dependent on the effective load on the controller in the corresponding application	
Brake chopper peak power with internal braking resistor	4.7 kW [1]	

Table 3.13 1) Data referred to mains voltage 3 x 400 V AC and 8 kHz switching frequency

Table 3.14 2) Connection of an external braking resistor not permitted for device variant with internal braking resistor (SO8x.xxx.xxxx.1xxx).

Mechanics, BG2	S084.008.0	S084.012.0
Cooling method	Air cooling (wall-mounted)	
Degree of protection	IP20 except terminals (IP00), fan opening (IP10)	
Cooling air temperature	45 °C (at 4 kHz power stage switching frequency)	
Weight	4.9 kg	
Mounting method	Vertical mounting with unhindered air flow	
Row mounting of multiple servocontrollers	Direct butt mounting	

Dimensions	BG2 [mm]
B (width)	90
H (height)	295 (without terminals)
T (depth)	224 (without terminals)
A	50
C / C1	344.5 / 5
D Ø	4.8
H1 / H2	355 / 38.5

Dimensional drawings, BG2 air cooling

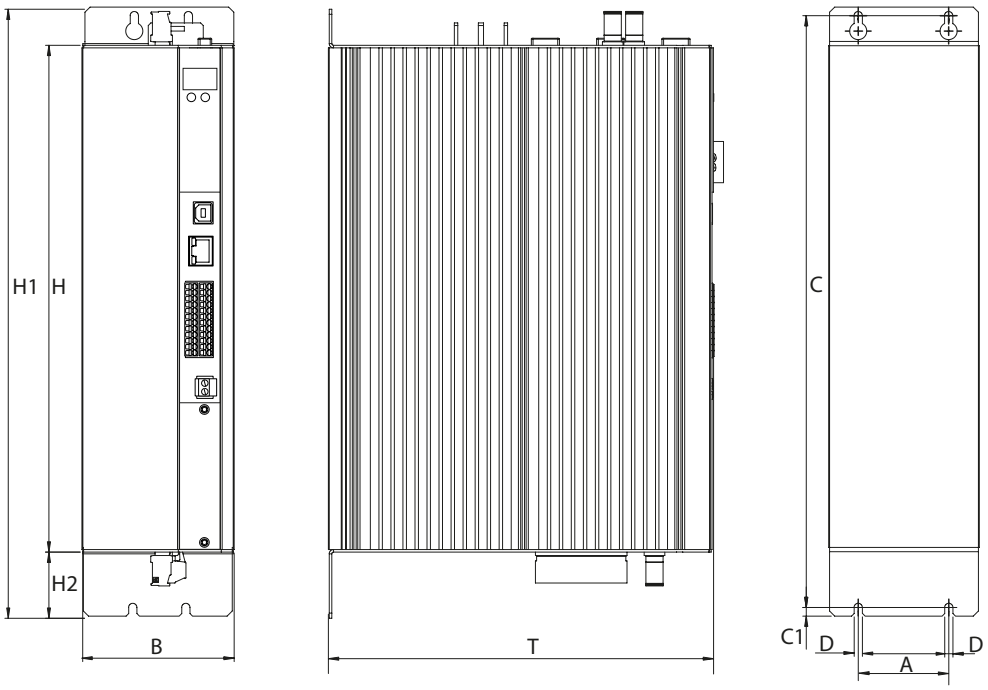

3.7.2 Matching accessories (see chapter 9)

Controller	S084.008.0	S084.012.0
Mains choke	LR34.8-UR	LR34.14-UR
Braking resistor	BR-090.01.540-UR (35 W) BR-090.02.540-UR (150 W) BR-090.03.540-UR (300 W) BR-090.10.650-UR (1000 W)	
Mains filter	EMC16.1-UR	EMC16.1-UR

Technical data, servocontrollers 16 A to 20 A (BG3)

Type SO84.016.0

SO8_.___.□□□□._□□□

- Cooling (0/1 air, 7/8 liquid)
- Rated current
- Mains voltage

Technical data / Article designation	SO84.016.0	SO84.020.0
Output, motor side		
Voltage	3-phase U_{Mains}	
Rated current, effective (I_N)	16 A [1]	20 A [1]
Peak current	See Tabelle 3.2 (air-cooled) and Tabelle 3.7 (liquid-cooled)	
Rotating field frequency	0 ... 400 Hz	
Switching frequency of the power stage	4, 8, 12, 16 kHz (factory setting 8 kHz at 40 °C cooling air temperature)	
Input, mains side		
Mains voltage (U_{Mains})	(3 x 230 V/3 x 400 V/3 x 460 V/3 x 480 V) ±10%	
Device connected load (with mains choke)	12.0 kVA [1]	15.0 kVA [1]
Current (with mains choke)	17.3 A [1]	21.6 A [1]
Asymmetry of the mains voltage	±3% max.	
Frequency	50/60 Hz ±10%	
Power dissipation at I_N [3]	330 W [1]	400 W [1]
DC link		
Capacitance	1230 µF	
Brake chopper switch-on threshold	650 V DC [1]	
Minimum ohmic resistance of an externally installed braking resistor [2]	20 Ω	
Brake chopper peak power with external braking resistor	21 kW	
Option: internal braking resistor	90 Ω	
Brake chopper continuous power with internal braking resistor	Dependent on the effective load on the controller in the corresponding application	
Brake chopper peak power with internal braking resistor	4.7 kW [1]	

Table 3.15 1) Data referred to mains voltage 3 x 400 V AC and 8 kHz switching frequency

Table 3.16 2) Connection of an external braking resistor not permitted for device variant with internal braking resistor (SO8x.xxx.xxxx.1xxx or SO8x.xxx.xxxx.7xxx).

Table 3.17 3) With liquid cooling typically 80% of the power dissipation is dissipated by the liquid chiller.

Mechanics, BG3	S084.016.0	S084.020.0
Cooling method	Air cooling (wall-mounted) or liquid cooling	
Degree of protection	IP20 except terminals (IP00)	
Cooling air temperature	45 °C (at 4 kHz power stage switching frequency)	
Weight	6.5 kg	
Mounting method	Vertical mounting with unhindered air flow	
Row mounting of multiple servocontrollers	Direct butt mounting	

Dimensions	BG3 [mm]
B (width)	130
H (height)	295 (without terminals)
T (depth)	224 (without terminals)
A / A1 / A2	80 / 10 / 60
C (air/liquid cooling)	344.5 / 382
C1	5
D Ø	4.8
D1 Ø (bore for pipe fitting)	48
H1 (air/liquid cooling)	355 / 392
H2 / H3	38.5 / 75
S	3/8 inch (female thread)
T1	74

Dimensional drawings, BG3 air cooling

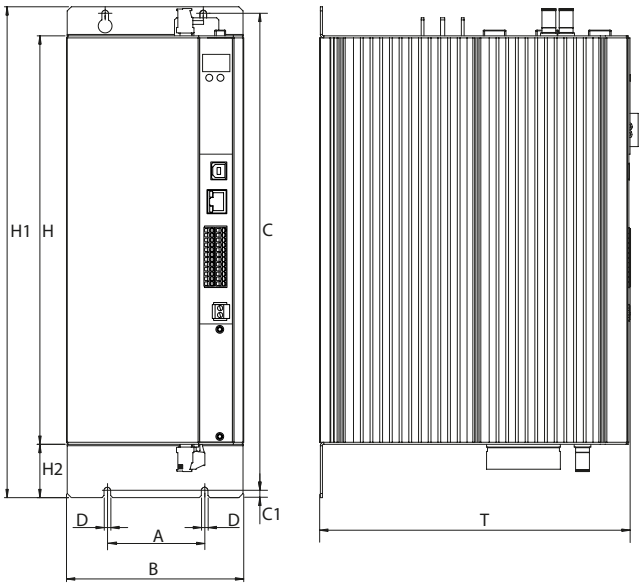

Dimensional drawings, BG3 liquid cooling

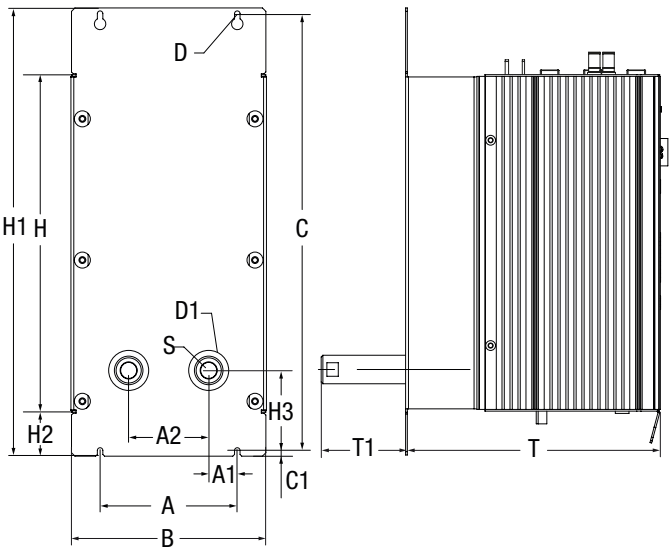

3.7.3 Matching accessories (see chapter 9)

Controller	S084.016.0	S084.020.0
Mains choke	LR34.17-UR	LR34.24-UR
Braking resistor	BR-026.01.540-UR (35 W) BR-026.02.540-UR (150 W) BR-026.03.540-UR (300 W) BR-026.10.650-UR (1000 W)	
Mains filter	EMC16.1-UR	EMC25.1-UR

Technical data, servocontrollers 24 A to 32 A (BG4)

Type SO84.024.0

SO8_.___.□□□□._□□□

- Cooling (0/1 air, 7/8 liquid)
- Rated current
- Mains voltage

Technical data / Article designation	SO84.024.0	SO84.032.0
Output, motor side		
Voltage	3-phase U_{Mains}	
Rated current, effective (I_N)	24 A [1]	32 A [1]
Peak current	See Tabelle 3.2 (air-cooled) and Tabelle 3.7 (liquid-cooled)	
Rotating field frequency	0 ... 400 Hz	
Switching frequency of the power stage	4, 8, 12, 16 kHz (factory setting 8 kHz at 40 °C cooling air temperature)	
Input, mains side		
Mains voltage (U_{Mains})	(3 x 230 V/3 x 400 V/3 x 460 V/3 x 480 V) ±10%	
Device connected load (with mains choke)	18.2 kVA [1]	24.2 kVA [1]
Current (with mains choke)	26.2 A [1]	34.9 A [1]
Asymmetry of the mains voltage	±3% max.	
Frequency	50/60 Hz ±10%	
Power dissipation at I_N [3]	475 W [1]	515 W [1]
DC link		
Capacitance	2000 µF	
Brake chopper switch-on threshold	650 V DC [1]	
Minimum ohmic resistance of an externally installed braking resistor [2]	12 Ω	
Brake chopper peak power with external braking resistor	35 kW	
Option: internal braking resistor	90 Ω	
Brake chopper continuous power with internal braking resistor	Dependent on the effective load on the controller in the corresponding application	
Brake chopper peak power with internal braking resistor	4.7 kW [1]	

Table 3.18 1) Data referred to mains voltage 3 x 400 V AC and 8 kHz switching frequency

Table 3.19 2) Connection of an external braking resistor not permitted for device variant with internal braking resistor (SO8x.xxx.xxxx.1xxx or SO8x.xxx.xxxx.7xxx).

Table 3.20 3) With liquid cooling typically 80% of the power dissipation is dissipated by the liquid chiller.

Mechanics, BG4	S084.024.0	S084.032.0
Cooling method	Air cooling (wall-mounted) or liquid cooling	
Degree of protection	IP20 except terminals (IP00)	
Cooling air temperature	45 °C (at 4 kHz power stage switching frequency)	
Weight	7.5 kg	
Mounting method	Vertical mounting with unhindered air flow	
Row mounting of multiple servocontrollers	Direct butt mounting	

Dimensions	BG4 [mm]
B (width)	171
H (height)	295 (without terminals)
T (depth)	224 (without terminals)
A / A1 / A2	120 / 25 / 70
C (air/liquid cooling)	344.5 / 382
C1	5
D Ø	4.8
D1 Ø (bore for pipe fitting)	48
H1 (air/liquid cooling)	355 / 392
H2 / H3	38.5 / 70
S	3/8 inch (female thread)
T1	74

Dimensional drawings, BG4 air cooling

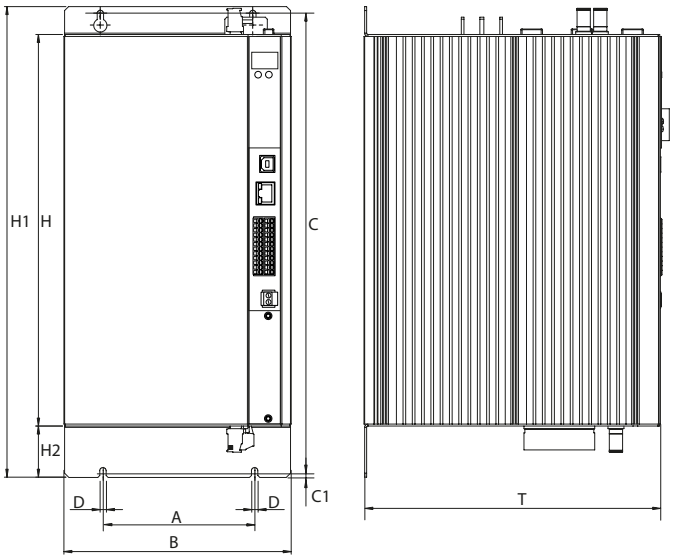

Dimensional drawings, BG4 liquid cooling

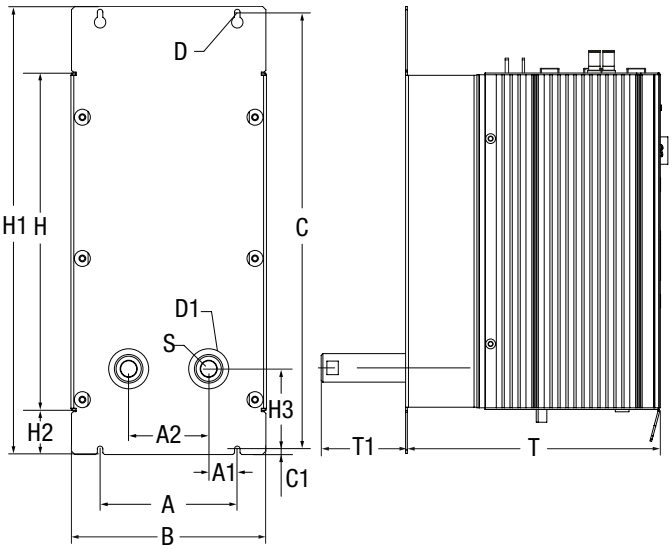

3.7.4 Matching accessories (see chapter 9)

Controller	S084.024.0	S084.032.0
Mains choke	LR 34.24-UR	LR34.32-UR
Braking resistor	BR-026.01.540-UR (35 W) BR-026.02.540-UR (150 W) BR-026.03.540-UR (300 W) BR-026.10.650-UR (1000 W)	
Mains filter	EMC25.1-UR	EMC35.1-UR

Technical data, servocontrollers 45 A to 84 A (BG5)

Type SO84.045.0 (air cooling)

SO8_.___.□□□□._□□□

- Cooling (0/1 air, 7/8 liquid)
- Rated current
- Mains voltage

Technical data / Article designation	SO84.045.0		SO84.060.0		SO84.072.0	
	Air-cooled	Liquid-cooled	Air-cooled	Liquid-cooled	Air-cooled	Liquid-cooled
Output, motor side						
Voltage	3-phase U_{Mains}					
Rated current, effective (I_N)	45 A 1)	53 A 1)	60 A 1)	70 A 1)	72 A 1)	84 A 1)
Peak current	See Tabelle 3.3 (air-cooled) and Tabelle 3.8 (liquid-cooled)					
Rotating field frequency	0 ... 400 Hz					
Switching frequency of the power stage	4, 8, 12, 16 kHz (factory setting 8 kHz at 40 °C cooling air temperature)					
Input, mains side						
Mains voltage (U_{Mains})	(3 x 230 V/3 x 400 V/3 x 460 V/3 x 480 V) ±10%					
Device connected load (with mains choke)	31.2 kVA 1)	36.7 kVA 1)	41.6 kVA 1)	48.5 kVA 1)	50 kVA 1)	52.6 kVA 1) *)
Current (with mains choke)	45 A 1)	53 A 1)	60 A 1)	70 A 1)	72 A 1)	76 A 1) *)
Asymmetry of the mains voltage	±3% max.					
Frequency	50/60 Hz ±10%					
Power dissipation at I_N 2)	610 W 1)	690 W 1)	830 W 1)	930 W 1)	1010 W 1)	1130 W 1)
DC link						
Capacitance	430 µF		900 µF			
Brake chopper switch-on threshold	820 V DC					
Minimum ohmic resistance of an externally installed braking resistor	18 Ω	10 Ω	18 Ω	10 Ω	13 Ω	10 Ω
Brake chopper peak power with external braking resistor	37 kW	67 kW	37 kW	67 kW	52 kW	67 kW
Option: internal braking resistor	-	20 Ω	-	10 Ω	-	10 Ω
Brake chopper continuous power with internal braking resistor	-	675 W	-	1350 W	-	1350 W
Brake chopper peak power with internal braking resistor	-	34 kW	-	67 kW	-	67 kW

Table 3.21 1) Data referred to mains voltage 3 x 400 V AC and 8 kHz switching frequency

Table 3.22 2) With liquid cooling typically 80% of the power dissipation is dissipated by the liquid chiller.

Table 3.23 *) D_N input current must be limited to max. 76 A.

Mechanics, BG5	SO84.045.0	SO84.060.0	SO84.072.0
Cooling method	Air cooling (wall-mounted) or liquid cooling		
Degree of protection	IP20 except terminals (IP00)		
Cooling air temperature	45 °C (at 4 kHz power stage switching frequency)		
Weight (air/liquid cooling)	13 kg / 16.5 kg		
Mounting method	Vertical mounting with unhindered air flow		
Row mounting of multiple servocontrollers	Possible at a distance of 20 mm (air cooling) or 2 mm (liquid cooling)		

Dimensions	BG5 [mm]
B (width)	190
H (height)	345 (without terminals)
D (depth) (air/liquid cooling)	238 / 198 (without terminals)
A (air/liquid cooling)	150 / 148
A1 / A2	39 / 70
C (air/liquid cooling)	365 / 378
C1 (air/liquid cooling)	6 / 8
D Ø (air/liquid cooling)	5.6 / 7
D1 Ø (bore for pipe fitting)	48
H1 (air/liquid cooling)	382.5 / 394
H2 (air/liquid cooling)	15 / 16.5
H3 • S • T1	53.5 • 3/8 inch (female thread) • 73.5

Dimensional drawings, BG5 air cooling

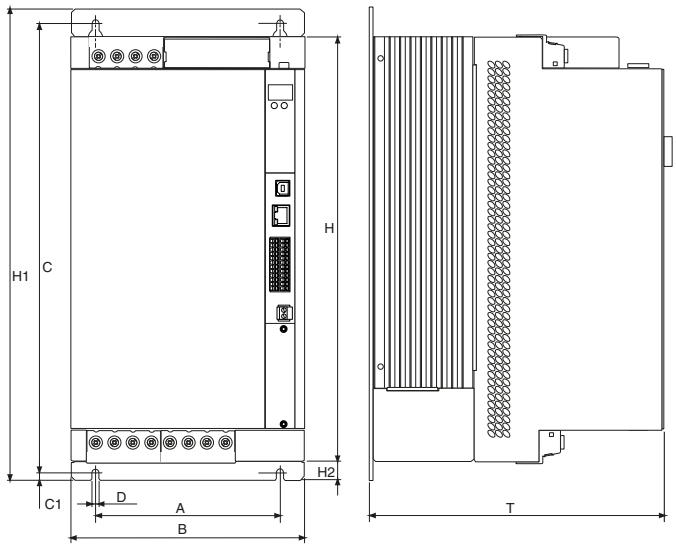

Dimensional drawings, BG5 liquid cooling

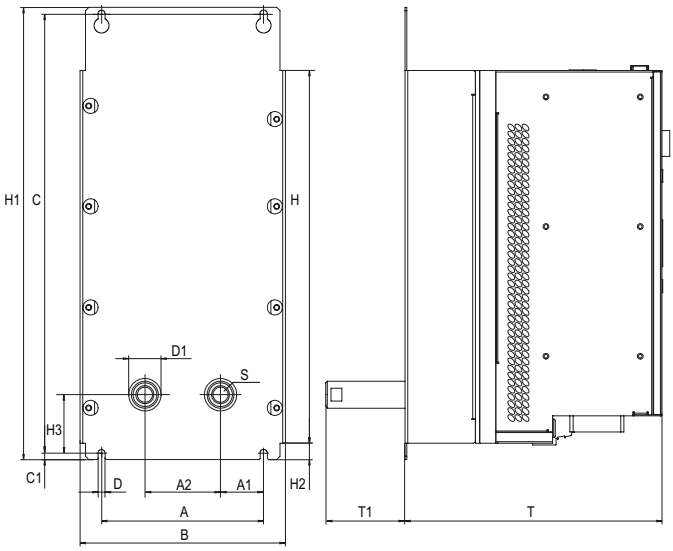

3.7.5 Matching accessories (see chapter 9)

Controller	SO84.045.0		SO84.060.0		SO84.072.0	
	Air-cooled	Liquid-cooled	Air-cooled	Liquid-cooled	Air-cooled	Liquid-cooled
Mains choke	LR34.44-UR	LR34.58-UR		LR34.70-UR		LR34.88-UR
Braking resistor	BR-026.01.540-UR (35 W) BR-026.02.540-UR (150 W) BR-026.03.540-UR (300 W) BR-026.10.650-UR (1000 W)		BR-026.20.650-UR (2000 W) BR-020.03.540-UR (300 W) BR-015.03.540-UR (300 W)	*(not for SO84.045.0 and SO84.060.0 with air cooling)*		
Mains filter	EMC63.1-UR			EMC100.1-UR		

Technical data, servocontrollers 90 A to 143 A (BG6)

Type SO84.110.0 (air cooling)

SO8_.___.□□□□._□□□

- Cooling (0/1 air, 7/8 liquid)
- Rated current
- Mains voltage

Technical data / Article designation	S084.090.0		S084.110.0	
	Air cooling	Liquid cooling	Air cooling	Liquid cooling
Output, motor side				
Voltage	3-phase U_{Mains}			
Rated current, effective (I_N)	90 A [1]	110 A [1]	110 A [1]	143 A [1]
Peak current	See Tabelle 3.5 (air-cooled) and Tabelle 3.10 (liquid-cooled)			
Rotating field frequency	0 ... 400 Hz			
Switching frequency of the power stage	4, 8, 12, 16 kHz (factory setting 8 kHz at 40 °C cooling air temperature)			
Input, mains side				
Mains voltage (U_{Mains})	(3 x 230 V/3 x 400 V/3 x 460 V/3 x 480 V) -15%/+10%			
Device connected load (with mains choke)	62 kVA [1]	76 kVA [1]	76 kVA [1]	99 kVA [1]
Current (with mains choke)	90 A [1]	110 A [1]	110 A [1]	143 A [1]
Asymmetry of the mains voltage	±3% max.			
Frequency	50/60 Hz ±10%			
Power dissipation at I_N [2]	1300 W [1]	1500 W [1]	1600 W [1]	1940 W [1]
DC link				
Capacitance	1060 µF	2120 µF	2120 µF	
Brake chopper switch-on threshold	820 V DC			
Minimum ohmic resistance of an externally installed braking resistor	12 Ω		10 Ω	
Brake chopper peak power with external braking resistor	56 kW	56 kW	67 kW	67 kW
Option: internal braking resistor	-	7.5 Ω	-	7.5 Ω
Brake chopper continuous power with internal braking resistor	-	2650 W	-	2650 W
Brake chopper peak power with internal braking resistor	-	90 kW	-	90 kW

Table 3.24 1) Data referred to mains voltage 3 x 400 V AC and 8 kHz switching frequency

Table 3.25 2) With liquid cooling typically 80% of the power dissipation is dissipated by the liquid chiller.

Mechanics, BG6	S084.090.0	S084.110.0
Cooling method	Air cooling (wall-mounted) or liquid cooling	
Degree of protection	IP20 except terminals (IP00)	
Cooling air temperature	45 °C (at 4 kHz power stage switching frequency)	
Weight (air/liquid cooling)	28 kg / 31.5 kg	
Mounting method	Vertical mounting with unhindered air flow	
Row mounting of multiple servocontrollers	Possible at a distance of 40 mm (air cooling) or 2 mm (liquid cooling)	

Dimensions	BG6 [mm]
B (width)	280
H (height)	540 (without terminals)
D (depth) (air/liquid cooling)	242 / 202 (without terminals)
A / A1 / A2	200 / 65 / 70
C / C1 / C2	581 / 10 / 10
D Ø	9.5
D1 Ø (bore for pipe fitting)	48
H1 / H2 / H3	600 / 20 / 56.5
S	3/8 inch (female thread)
T1	73.5

Dimensional drawings, BG6 air cooling

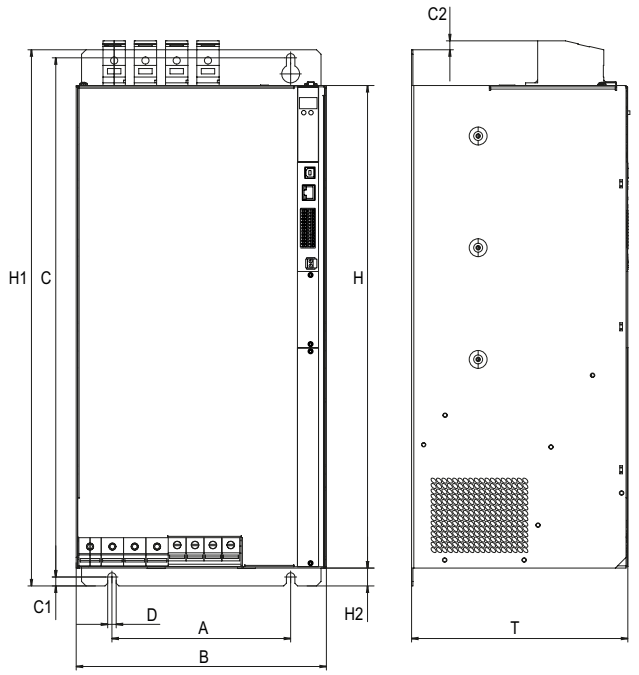

Dimensional drawings, BG6 liquid cooling

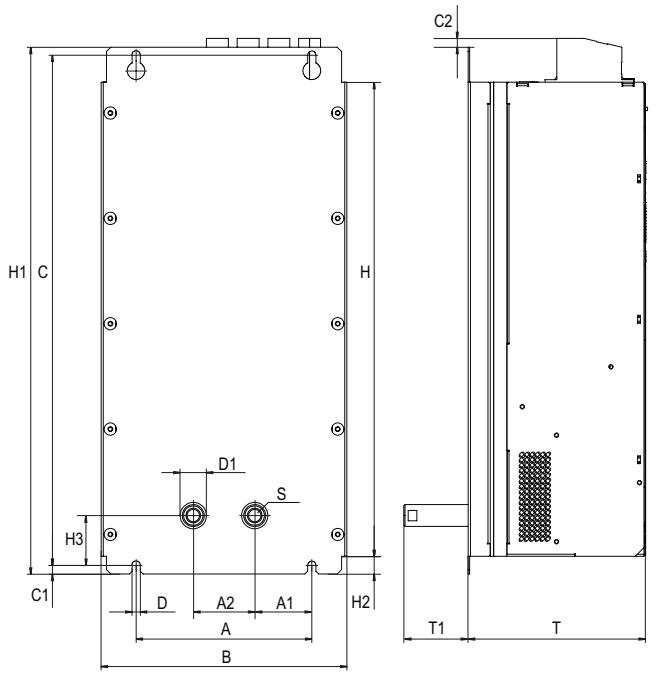

3.7.6 Matching accessories (see chapter 9)

Controller	S084.090.0		S084.110.0	
	Air cooling	Liquid cooling	Air cooling	Liquid cooling
Mains choke	LR 34.88-UR	LR34.108-UR		LR34.140-UR
Braking resistor	BR-026.01.540-UR (35 W) BR-026.02.540-UR (150 W) BR-026.03.540-UR (300 W) BR-026.10.650-UR (1000 W)	BR-026.20.650-UR (2000 W) BR-020.03.540-UR (300 W) BR-015.03.540-UR (300 W)		
Mains filter	EMC100.1-UR	EMC150.1-UR		

Technical data, servocontrollers 143 A to 210 A (BG6a)

Type SO84.170.0 (air cooling)

SO8_.___.□□□□._□□□

- Cooling (0/1 air, 7/8 liquid)
- Rated current
- Mains voltage

Technical data / Article designation	S084.143.0		S084.170.0	
	Air cooling	Liquid cooling	Air cooling	Liquid cooling
Output, motor side				
Voltage	3-phase U_{Mains}			
Rated current, effective I_N	143 A [1)]	170 A [1)]	170 A [1)]	210 A [1)]
Peak current	See Tabelle 3.5 (air-cooled) and Tabelle 3.10 (liquid-cooled)			
Rotating field frequency	0 ... 400 Hz			
Switching frequency of the power stage	4, 8, 12, 16 kHz (factory setting 8 kHz at 40 °C cooling air temperature)			
Input, mains side				
Mains voltage (U_{Mains})	(3 x 230 V/3 x 400 V/3 x 460 V/3 x 480 V) -15%/+10%			
Device connected load (with mains choke)	99 kVA [1)]	118 kVA [1)]	118 kVA [1)]	128 kVA [1) *)]
Current (with mains choke)	143 A [1)]	170 A [1)]	170 A [1)]	185 A [1)]
Asymmetry of the mains voltage	±3% max.			
Frequency	50/60 Hz ±10%			
Power dissipation at I_N [2)]	2100 W [1)]	2380 W [1)]	2500 W [1)]	2650 W [1) *)]
DC link				
Capacitance	3180 µF	4240 µF	4240 µF	
Brake chopper switch-on threshold	820 V DC			
Minimum ohmic resistance of an externally installed braking resistor	8.5 Ω		6.5 Ω	
Brake chopper peak power with external braking resistor	79 kW	79 kW	103 kW	103 kW
Option: internal braking resistor	-	7.5 Ω	-	7.5 Ω
Brake chopper continuous power with internal braking resistor	-	2650 W	-	2650 W
Brake chopper peak power with internal braking resistor	-	90 kW	-	90 kW

Table 3.26 1) Data referred to mains voltage 3 x 400 V AC and 8 kHz switching frequency

Table 3.27 2) With liquid cooling typically 80% of the power dissipation is dissipated by the liquid chiller.

Table 3.28 *) The input current must be limited to max. 185 A!

Mechanics, BG6a	S084.143.0	S084.170.0
Cooling method	Air cooling (wall-mounted) or liquid cooling	
Degree of protection	IP20 except terminals (IP00)	
Cooling air temperature	45 °C (at 4 kHz power stage switching frequency)	
Weight (air/liquid cooling)	32 kg / 41.1 kg	
Mounting method	Vertical mounting with unhindered air flow	
Row mounting of multiple servocontrol-lers	Possible at a distance of 40 mm (air cooling) or 2 mm (liquid cooling)	

Dimensions	BG6a [mm]
B (width)	280
H (height)	540 (without terminals)
D (depth) (air/liquid cooling)	322 / 282 (without terminals)
A / A1 / A2	200 / 65 / 70
C / C1 / C2	581 / 10 / 10
D Ø	9.5
D1 Ø (bore for pipe fitting)	48
H1 / H2 / H3	600 / 20 / 56.5
S	3/8 inch (female thread)
T1	73.5

Dimensional drawings, BG6a air cooling

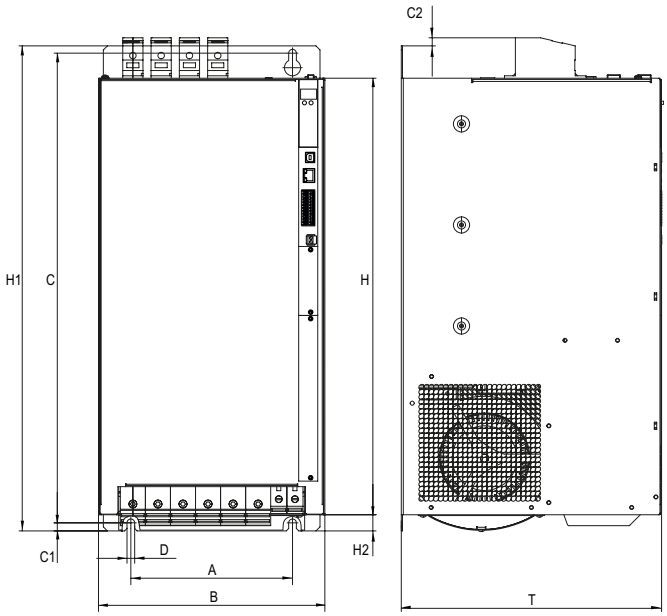

Dimensional drawings, BG6a liquid cooling

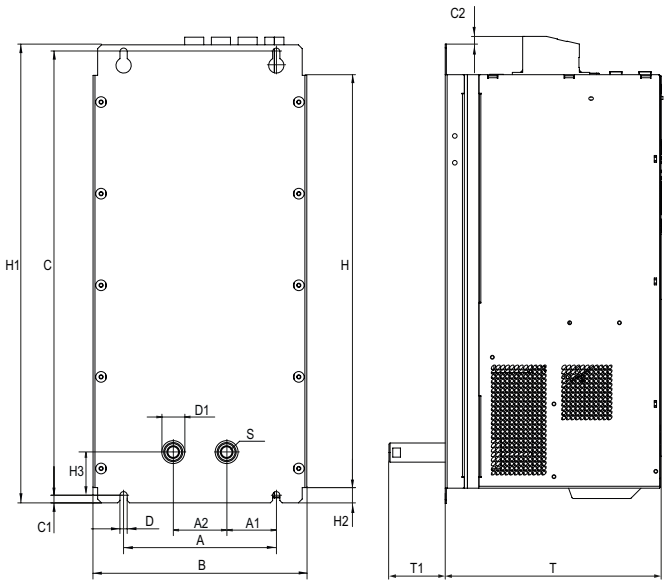

3.7.7 Matching accessories (see chapter 9)

Controller	S084.143.0		S084.170.0	
	Air cooling	Liquid cooling	Air cooling	Liquid cooling
Mains choke	LR34.140-UR	LR34.168-UR		LR34.210-UR
Braking resistor	BR-026.01.540-UR (35 W) BR-026.02.540-UR (150 W) BR-026.03.540-UR (300 W) BR-026.10.650-UR (1000 W)	BR-026.20.650-UR (2000 W) BR-020.03.540-UR (300 W) BR-015.03.540-UR (300 W)		
Mains filter	EMC150.1-UR	EMC180.1-UR		EMC220.1-UR

Technical data, servocontrollers 250 A to 450 A (BG7)

Type SO84.250.0 (liquid cooling)

SO8_.___.□□□□._□□□

- Cooling (0/1 air, 7/8 liquid)
- Rated current
- Mains voltage

Technical data / Article designation	SO84.250.0	SO84.325.0	SO84.450.0
Output, motor side			
Voltage	3-phase U_{Mains}		
Rated current, effective (I_N)	250 A [1]	325 A [1]	450 A [1]
Peak current	See Tabelle 3.12 and Tabelle 3.13 (standard and HF)		
Rotating field frequency	0 ... 400 Hz (standard) 0 ... 1600 Hz (HF[3])		
Switching frequency of the power stage (up to +40 °C)	2, 4 kHz (standard, factory setting 2 kHz) and 8, 12, 16 kHz (HF[3])		
Input, mains side			
Mains voltage (U_{Mains})	(3 x 230 V/3 x 400 V/3 x 460 V/3 x 480 V) ±10%		
Device connected load (with mains choke)	173 kVA [1]	225 kVA [1]	310 kVA [1]
Current (with mains choke)	250 A [1]	325 A [1]	450 A [1]
Asymmetry of the mains voltage	±3% max.		
Frequency	50/60 Hz ±10%		
Power dissipation at I_N [2]	3960 W [1]	4800 W [1]	6750 W [1]
DC link			
Capacitance	3600 µF	5400 µF	7200 µF
Brake chopper switch-on threshold	820 V DC		
Minimum ohmic resistance of an externally installed braking resistor	3.2 Ω	2.5 Ω	1.7 Ω
Brake chopper peak power with external braking resistor	210 kW	269 kW	395 kW
Option: internal braking resistor	3.3 Ω	3.3 Ω	2.4 Ω
Brake chopper continuous power with internal braking resistor	5000 W		6800 W
Brake chopper peak power with internal braking resistor	204 kW		280 kW

Table 3.29 1) Data referred to mains voltage 3 x 400 V AC and 2 kHz switching frequency

Table 3.30 2) With liquid cooling typically 80% of the power dissipation is dissipated by the liquid chiller.

Table 3.31 3) Model HF = SO84.xxx.xxxx.x7 or SO84.xxx.xxxx.x8 (For details see „Bestellschlüssel ServoOne Einzelachssystem“ auf Seite 36)

Mechanics, BG7	S084.250.0	S084.325.0	S084.450.0
Cooling method	Liquid cooling		
Degree of protection	IP20 except terminals (IP00)		
Coolant temperature	Max. 40 °C, not more than 10 K below the ambient temperature		
Weight	100 kg		
Mounting method	Vertical mounting		
Row mounting of multiple servocontrol-lers	Direct butt mounting		

Dimensions	BG7 [mm]
B (width)	380 / 385 (with shield plate)
H (height)	855 / 1171 (with terminal cover) 1315 with shield plates
T (depth)	287 (without terminals)
A / A1 / A2	150 / 29 / 70
C / C1	952 / 14
D Ø	12
D1 Ø (bore for pipe fitting)	48
H1 / H2 / H3	979 / 62 / 124
S	3/8 inch (female thread)
T1	74

Dimensional drawings, BG7 liquid cooling

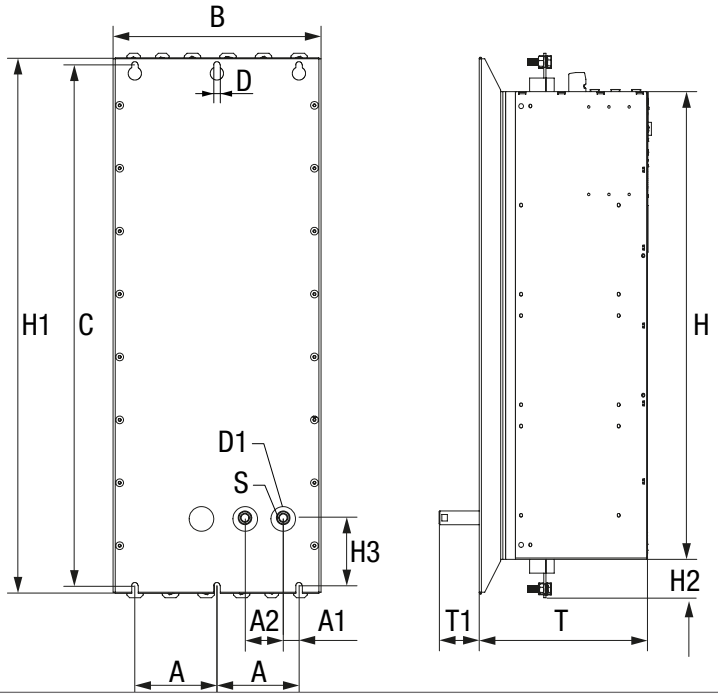

3.7.8 Matching accessories (see chapter 9)

Controller	S084.250.0	S084.325.0	S084.450.0
Mains choke	LR34.250-UR	LR34.325-UR	LR34.450-UR
Braking resistor	BR-026.10.650-UR (1000 W) BR-026.20.650-UR (2000 W)	BR-020.03.540-UR (300 W) BR-015.03.540-UR (300 W)	
Mains filter	EMC250.1-UR	EMC300.1-UR [1)] EMC400.1-UR [1)]	EMC400.1-UR [1)] EMC500.1-UR [1)]

1) Dependent on effective mains current

4 ServoOne multi-axis system

Supply unit BG5 | Axis controller BG5 | Axis controller BG4 | Axis controller BG3 | Axis controller BG2 | Axis controller BG1

Overview, axis controllers

Type	Size	Rated current		Current carrying capacity	Technical data
		Air cooling	Liquid cooling		
S084.004.1	BG1	4.0 A	-	From Page 82	From Page 94
S084.006.1	BG1	6.0 A	-		
S084.008.1	BG2	8.0 A	-	From Page 82	From Page 96
S084.012.1	BG2	12 A	-		
S084.016.1	BG3	16 A	20 A	From Page 82 and from Page 86	From Page 98
S084.020.1	BG3	20 A	25 A		
S084.024.1	BG4	24 A	26 A	From Page 82 and from Page 86	From Page 100
S084.032.1	BG4	32 A	35 A		
S084.045.1	BG5	45 A	53 A	From Page 84 and from Page 88	From Page 102
S084.060.1	BG5	60 A	70 A		
S084.072.1	BG5	72 A	84 A		
S084.090.1	BG6a	90 A	110 A	From Page 84 and from Page 88	From Page 104
S084.110.1	BG6a	110 A	143 A		
S084.143.1	BG6a	143 A	170 A		
S084.170.1	BG6a	170 A	210 A		
S084.250.1	BG7	-	250 A	From page Page 90 with function package HF from Page 90	From Page 106
S084.325.1	BG7	-	325 A		
S084.450.1	BG7	-	450 A		

Overview, supply units

Type	Size	Rated current	Current carrying capacity	Technical data
S084.040.S	BG5	40 A	From Page 91	Page 108
S084.076.S	BG5	76 A		
S084.115.S	BG6a	115 A	From Page 91	Page 110
S084.170.S	BG6a	170 A		
S084.375.S	BG7	375 A	From Page 91	Page 112
S084.540.S	BG7	540 A		

4.1 Order codes, ServoOne multi-axis system

4.1.1 Order codes, axis controller

Article designation	SO84.		006	. 1	0	2	1	. 0	0	0	0	. X
ServoOne												
Rated current	BG1	4 A	004									
		6 A	006									
	BG2	8 A	008									
		12 A	012									
	BG3	16 A	016									
		20 A	020									
	BG4	24 A	024									
		32 A	032									
	BG5	45 A	045									
		60 A	060									
		72 A	072									
	BG6a	90 A	090									
		110 A	110									
		143 A	143									
		170 A	170									
	BG7	250 A	250									
		325 A	325									
		450 A	450									
Supply	DC			1								
Safety technology	STO				0							
	Integrated safety control [1]				1							
Option 1 Communication	Not included					0						
	Sercos II					1						
	PROFIBUS					2						
	EtherCAT					3						
	CANopen					4						
	CANopen + 2 AO					5						
	PROFINET IRT					7						
	Sercos III					8						
	Powerlink [2]					9						
Option 2 Technology	Not included						0					
	Second SinCos encoder						1					
	TTL encoder simulation / TTL master encoder						2					
	TwinSync communication						3					
	SSI encoder simulation						4					
	TTL encoder with commutation signals						5					
	Multi_IO (analogue and digital expansion (MIO)						6					
	Digital input/output expansion (DIO)						8					
	Second safe SinCos encoder						A					
	Second safe SSI encoder						B					
	Second safe axis monitor (SinCos)						C					
Housing/cooling method	Air-cooled (standard) without RB BG1 ... BG6a							0				
	Air-cooled with int. braking resistor BG1...BG6-6a							1				
	Liquid-cooled with int. braking resistor from BG5 ... BG7							7				
	Liquid-cooled from BG5 ... BG7, BG3 ... BG4 upon request 3)							8				
Function package	Basic (without additional function package)								0			
	iPlc								1			
	Hydraulic								2			
	Hydraulic + iPLc								3			
	HF								7			
	HF + iPlc								8			
Special design	None									0		
Protection	Standard										0	
	PCBs with protective varnish (from SO84.045 standard)										1	
Hardware version	(May be multi-digit)											X

1) FS certification BG1 - BG5 2) Upon request *3) Not possible for BG3+4 with intgr. safety control*

4.1.2 Order codes, supply unit

Article designation	S08	4	.	040	.	S	0	2	0	.	0	0	0	0	.	X
ServoOne																
Connection class	3 x 400 V	4														
Rated current	BG5 40 A 040 76 A 076 BG6a 115 A 115 170 A 170 BG7 375 A 375 540 A 540															
DC supply unit regenerative						S										
Option 1 Communication (see note below)	Not included 0 Sercos II 1 PROFIBUS 2 EtherCAT 3 CANopen 4															
Option 2 Technology	None 0															
Housing/cooling method	Air-cooled 0 Liquid-cooled with int. braking resistor 7 Liquid-cooled 8															
Function package	Basic (without additional function package) 0 iPlc 1															
Special design	None 0															
Protection	Standard 0 PCBs with protective varnish 1															
Hardware version	(May be multi-digit) X															

NOTE:

All communication options for the supply units are non-compliant with the standards. This means that it is only possible to transfer actual data, but not to control.

4.2 Features, ServoOne axis controller

4.2.1 Features, axis controllers BG1 to BG5

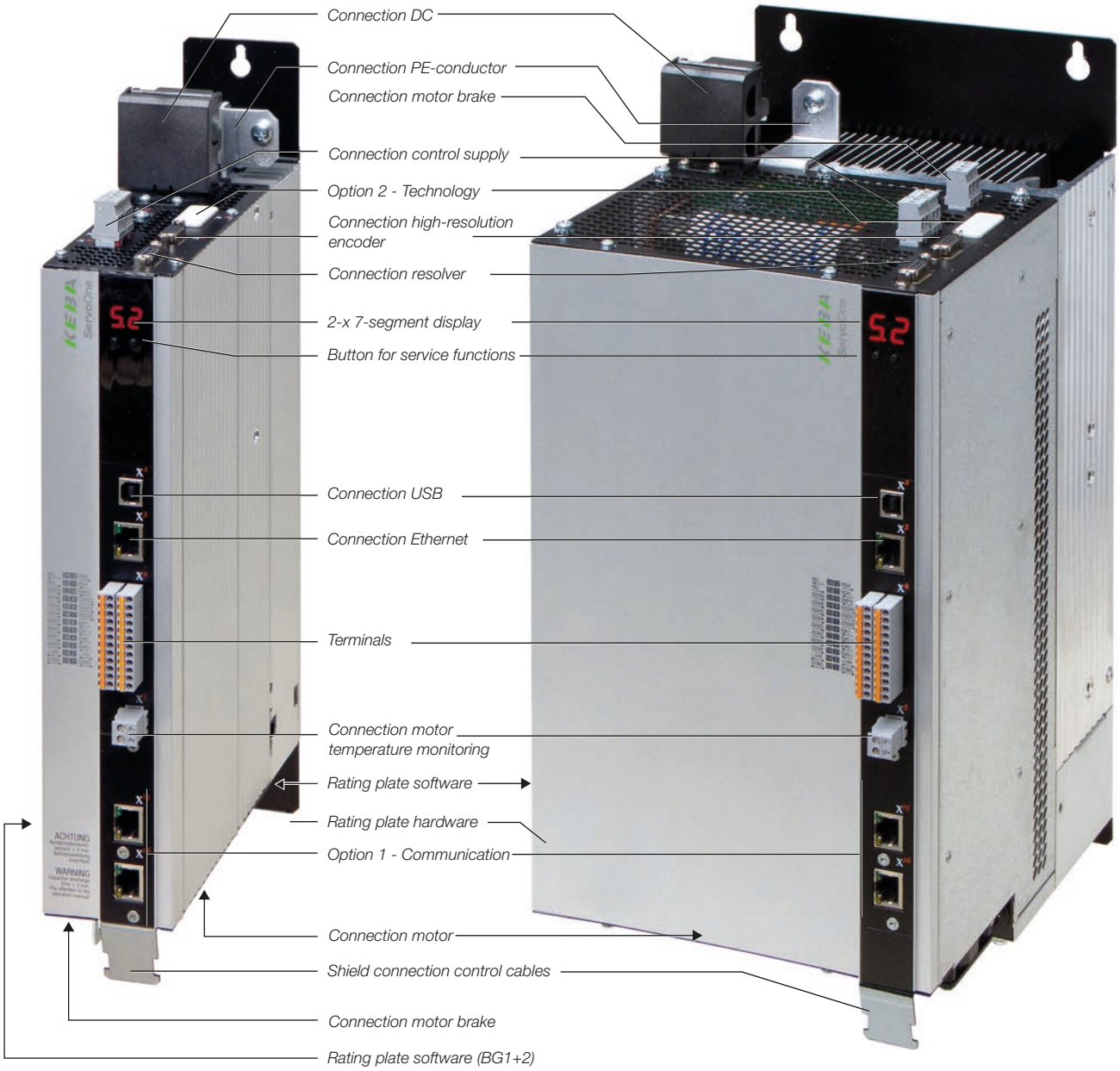

4.2.2 Features, axis controller BG6a

4.2.3 Features, axis controller BG7

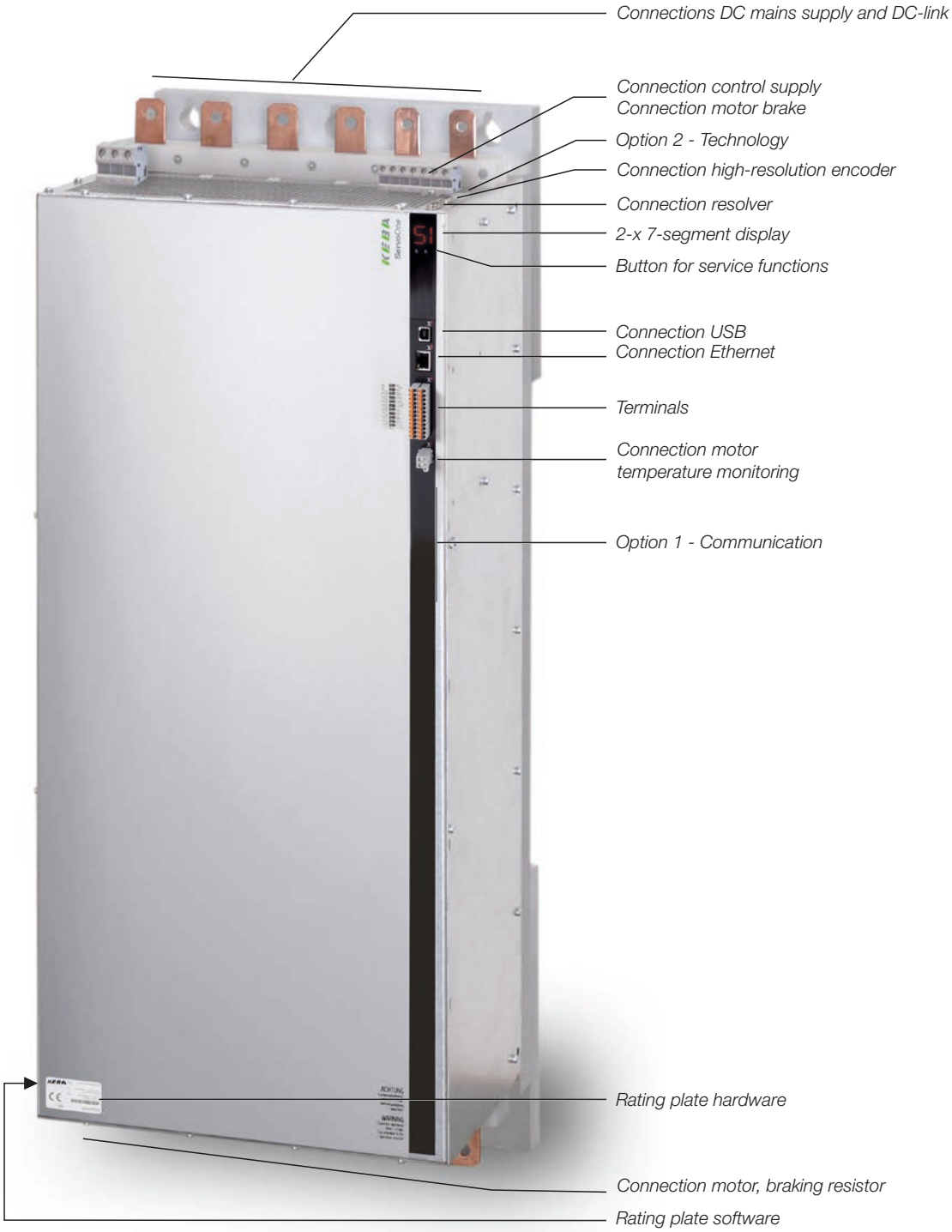

4.3 Features, ServoOne supply unit

4.3.1 Features, supply unit BG5

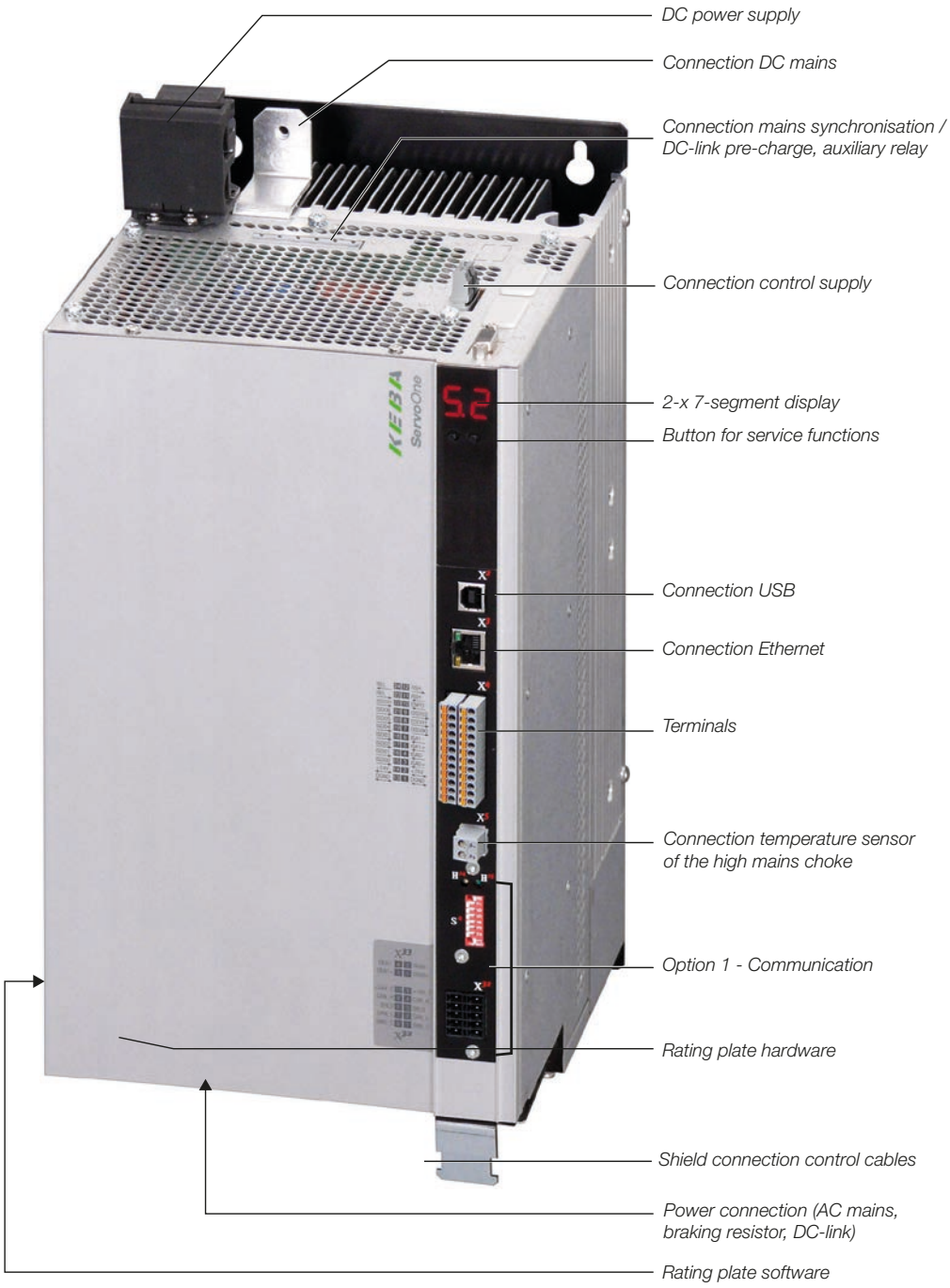

4.3.2 Features, supply unit BG6a

4.3.3 Features, supply unit BG7

4.4 Current carrying capacity, ServoOne multi-axis system

The maximum permissible DC axis controller output current and the peak current are dependent on the DC supply voltage, the motor cable length, the power stage switching frequency, the design of the cooling and the ambient temperature. If the conditions change, the maximum permissible current carrying capacity of the axis controllers also changes.

4.4.1 Current carrying capacity, axis controller BG1-BG4 air cooling

DC axis controller	Switching frequency power stage [kHz]	Ambient temperature [°C]	At 565 V DC *)				At 650 V DC*) **)				For time [s]
			Rated current [A_{eff}]	Peak current 1) [A_{eff}] At rotating field frequency increasing linearly			Rated current [A_{eff}]	Peak current 1) [A_{eff}] At rotating field frequency increasing linearly			
				0 Hz	Up to 5 Hz	> 5 Hz		0 Hz	Up to 5 Hz	> 5 Hz	
S084.004.1xxx.0 (BG1)	4	40	5.3	8.4	8.4		5.3	8.4	8.4		10
	8		4.0	8.4	8.4		3.4	7.2	7.2		
	12		3.7	6.6	6.6		2.8	5.0	5.0		
	16		2.7	5.2	5.2		1.9	3.6	3.6		
S084.006.1xxx.0 (BG1)	4	40	8.0	12.7	12.7		8.0	12.7	12.7		10
	8		6.0	12.7	12.7		5.1	10.8	10.8		
	12		5.5	9.9	9.9		4.2	7.5	7.5		
	16		4.0	7.7	7.7		2.9	5.6	5.6		
S084.008.1xxx.0 (BG2)	4	40	9.3	15.9	15.9		8.5	14.6	14.6		10
	8		9.3	15.9	15.9		6.7	11.5	11.5		
	12		6.7	9.4	9.4		5.6	7.9	7.9		
	16		5.5	7.7	7.7		4.1	5.8	5.8		
S084.012.1xxx.0 (BG2)	4	40	14.0	24.0	24.0		11.8	20.2	20.2		10
	8		14.0	24.0	24.0		10.0	17.1	17.1		
	12		10.0	14.1	14.1		8.4	11.8	11.8		
	16		8.2	11.5	11.5		6.2	8.7	8.7		
S084.016.1xxx.0 (BG3)	4	40	20.0	33.6	33.6		20.0	33.6	33.6		10
	8		16.0	33.6	33.6		13.9	29.1	29.1		
	12		11.0	23.6	23.6		8.8	18.9	18.9		
	16		8.5	19.4	19.4		6.5	14.8	14.8		
S084.020.1xxx.0 (BG3)	4	40	25.0	42.0	42.0		25.0	42.0	42.0		10
	8		20.0	42.0	42.0		17.4	36.5	36.5		
	12		13.8	29.6	29.6		11.0	23.6	23.6		
	16		10.0	22.8	22.8		7.4	16.8	16.8		
S084.024.1xxx.0 (BG4)	4	40	30.0	48.0	48.0		26.0	41.6	41.6		10
	8		24.0	48.0	48.0		21.0	42.0	42.0		
	12		15.8	31.6	31.6		12.4	24.8	24.8		
	16		11.3	22.6	22.6		8.9	17.8	17.8		
S084.032.1xxx.0 (BG4)	4	40	40.0	64.0	64.0		33.7	53.9	53.9		10
	8		32.0	64.0	64.0		28.0	56.0	56.0		
	12		21.0	42.0	42.0		16.5	33.0	33.0		
	16		15.0	30.0	30.0		11.9	23.8	23.8		

1) At max. 70% initial load 2) Shutdown as per I^2t characteristic All data apply for a motor cable length ≤10 m

**) If supplied by drive controller, single-axis system **) If supplied by an active supply unit*

Table 4.1 Rated and peak current, S084.004 to S084.032 (air cooling)

DC axis controller	Switching frequency power stage [kHz]	Ambient temperature [°C]	At 678 V DC*) Rated current [Aeff]	At 678 V DC*) Peak current 1) [A_{eff}] At rotating field frequency increasing linearly: 0 Hz	Up to 5 Hz	> 5 Hz	At 770 V DC **) Rated current [A_{eff}]	At 770 V DC **) Peak current 1) [Aeff] At rotating field frequency increasing linearly: 0 Hz	Up to 5 Hz	> 5 Hz	For time [s]
S084.004.1xxx.0 (BG1)	4	40	5.3	8.4	8.4		5.1	8.1	8.1		10
	8		3.3	7.0	7.0		3.2	6.8	6.8		
	12		2.7	4.8	4.8		2.1	3.8	3.8		
	16		1.8	3.4	3.4		1.1	2.1	2.1		
S084.006.1xxx.0 (BG1)	4	40	8.0	12.7	12.7		7.6	12.1	12.1		10
	8		5.0	10.6	10.6		4.8	10.2	10.2		
	12		4.0	7.2	7.2		3.2	5.7	5.7		
	16		2.7	5.2	5.2		1.6	3.1	3.1		
S084.008.1xxx.0 (BG2)	4	40	8.5	14.6	14.6		8.0	13.7	13.7		10
	8		6.1	10.4	10.4		5.9	10.1	10.1		
	12		5.4	7.6	7.6		5.3	7.4	7.4		
	16		3.9	5.5	5.5		3.7	5.2	5.2		
S084.012.1xxx.0 (BG2)	4	40	11.4	19.5	19.5		11.2	19.2	19.2		10
	8		9.2	15.8	15.8		8.8	15.1	15.1		
	12		8.1	11.4	11.4		7.9	11.1	11.1		
	16		5.8	8.2	8.2		5.5	7.7	7.7		
S084.016.1xxx.0 (BG3)	4	40	20.0	33.6	33.6		20.0	33.6	33.6		10
	8		13.3	27.9	27.9		11.2	23.5	23.5		
	12		8.5	18.3	18.3		7.0	15.0	15.0		
	16		6.0	13.7	13.7		4.5	10.2	10.2		
S084.020.1xxx.0 (BG3)	4	40	25.0	42.0	42.0		25.0	42.0	42.0		10
	8		16.6	34.8	34.8		14.0	29.4	29.4		
	12		10.0	21.5	21.5		7.5	16.1	16.1		
	16		6.5	14.8	14.8		5.0	11.4	11.4		
S084.024.1xxx.0 (BG4)	4	40	26.0	41.6	41.6		26.0	41.6	41.6		10
	8		20.0	40.0	40.0		18.9	37.8	37.8		
	12		11.3	22.6	22.6		10.5	21.0	21.0		
	16		8.4	16.8	16.8		7.9	15.8	15.8		
S084.032.1xxx.0 (BG4)	4	40	32.5	52.0	52.0		32.0	51.2	51.2		10
	8		26.7	53.4	53.4		25.2	50.4	50.4		
	12		15.0	30.0	30.0		14.0	28.0	28.0		
	16		11.2	22.4	22.4		10.5	21.0	21.0		

1) At max. 70% initial load 2) Shutdown as per I^2t characteristic All data apply for a motor cable length ≤10 m

**) If supplied by drive controller, single-axis system **) If supplied by an active supply unit*

4.4.2 Current carrying capacity, axis controller BG5 to BG6a air cooling

DC axis controller	Power stage switching frequency [kHz]	Ambient temperature [°C]	At 565 V DC *)				At 650 V DC *) **)				Overload factor [%]	For time 2) [s]
			Rated current [A_{eff}]	Peak current [A_{eff}] 1)			Rated current [A_{eff}]	Peak current [Aeff] 1)				
				At rotating field frequency increasing linearly		Intermittent operation		At rotating field frequency increasing linearly		Intermittent operation		
				0 Hz	Up to 5 Hz	> 5 Hz		0 Hz	Up to 5 Hz	> 5 Hz		
S084.045.1xxx.0 (BG5)	4	40	45	90	90		42	84	84		200	10
	8		45	90	90		42	84	84			
	12		45	90	90		42	84	84			
	16		42	84	84		39	78	78			
S084.060.1xxx.0 (BG5)	4	40	60	120	120		56	111	111		200	10
	8		60	120	120		56	111	111			
	12		58	116	116		54	108	108			
	16		42	84	84		39	78	78			
S084.072.1xxx.0 (BG5)	4	40	72	144	144		67	133	133		200	10
	8		72	144	144		67	133	133			
	12		58	116	116		54	108	108			
	16		42	84	84		39	78	78			
S084.090.1xxx.0 (BG6a)	4	40	90	170	180		83	157	166		200	30
	8		90	134	180		83	124	166			
	12		90	107	144		83	99	133		160	
	16		72	86	115		67	80	107			
S084.110.1xxx.0 (BG6a)	4	40	110	170	220		102	157	204		200	30
	8		110	134	165		102	125	153		150	
	12		90	107	144		83	99	133		160	
	16		72	86	115		67	80	107		160	
S084.143.1xxx.0 (BG6a)	4	40	143	191	286		132	176	264		200	30
	8		143	152	215		132	140	198		150	
	12		115	122	172		106	112	159		150	
	16		92	98	138		85	91	128		150	
S084.170.1xxx.0 (BG6a)	4	40	170	191	315		157	176	291		185	10
	8		170	152	221		157	140	204		130	
	12		136	122	163		126	112	151		120	
	16		109	98	131		101	91	121		120	

1) At max. 70% initial load

2) Shutdown as per I^2t characteristic

All data apply for a motor cable length ≤10 m

**) If supplied by drive controller, single-axis system*

***) If supplied by an active supply unit*

Table 4.2 Rated and peak current, S084.045 to S084.170 (air cooling)

DC axis controller	Power stage switching frequency [kHz]	Ambient temperature [°C]	At 678 V DC *) Rated current [A_{eff}]	At 678 V DC *) Peak current [A_{eff}] 1) At rotating field frequency increasing linearly: 0 Hz	Up to 5 Hz	> 5 Hz	At 770 V DC **) Rated current [A_{eff}]	At 770 V DC **) Peak current [A_{eff}] 1) At rotating field frequency increasing linearly: 0 Hz	Up to 5 Hz	> 5 Hz	Overload factor [%]	For time 2) [s]
S084.045.1xxx.0 (BG5)	4	40	41	82	82		41	82	82		200	10
	8		41	82	82		41	82	82			
	12		41	82	82		37	74	74			
	16		38	76	76		34	64	68			
S084.060.1xxx.0 (BG5)	4	40	54	108	108		54	108	108		200	10
	8		54	108	108		54	108	108			
	12		52	104	104		48	96	96			
	16		38	76	76		34	68	68			
S084.072.1xxx.0 (BG5)	4	40	65	130	130		65	130	130		200	10
	8		65	130	130		65	130	130			
	12		52	104	104		48	96	96			
	16		38	76	76		34	68	68			
S084.090.1xxx.0 (BG6a)	4	40	81	153	162		73	138	146		200	30
	8		81	121	162		73	109	146			
	12		81	96	130		73	86	117		160	
	16		65	77	104		59	70	94			
S084.110.1xxx.0 (BG6a)	4	40	99	153	198		90	134	180		200	30
	8		99	121	149		90	109	135		150	
	12		81	96	130		73	86	117		160	
	16		65	77	104		59	70	94		160	
S084.143.1xxx.0 (BG6a)	4	40	129	171	258		116	154	232		200	30
	8		129	137	194		116	122	174		150	
	12		104	109	156		94	98	141		150	
	16		83	87	125		75	78	138		150	
S084.170.1xxx.0 (BG6a)	4	40	153	171	283		138	154	255		185	10
	8		153	137	199		138	122	179		130	
	12		122	109	146		110	98	132		120	
	16		98	87	118		88	78	106		120	

1) At max. 70% initial load

2) Shutdown as per I²t characteristic

All data apply for a motor cable length ≤10 m

**) If supplied by drive controller, single-axis system*

***) If supplied by an active supply unit*

4.4.3 Current carrying capacity, axis controller BG3 to BG4, liquid cooling

DC axis controller	Power stage switching frequency [kHz]	Ambient temperature [°C]	At 565 V DC *)				At 650 V DC *) **)				For time 2) [s]
			Rated current [A_{eff}]	Peak current [A_{eff}] 1)			Rated current [A_{eff}]	Peak current [A_{eff}] 1)			
				At rotating field frequency increasing linearly		Intermittent operation		At rotating field frequency increasing linearly		Intermittent operation	
				0 Hz	Up to 5 Hz	> 5 Hz		0 Hz	Up to 5 Hz	> 5 Hz	
SO84.016.1xxx.8 (BG3)	4	40	20.0	33.6	33.6		20.0	33.6	33.6		10
	8		20.0	33.6	33.6		17.4	29.2	29.2		
	12		17.4	26.4	26.4		12.5	19.0	19.0		
	16		12.0	18.2	18.2		9.1	13.8	13.8		
SO84.020.1xxx.8 (BG3)	4	40	25.0	42.0	42.0		25.0	42.0	42.0		10
	8		25.0	42.0	42.0		21.8	36.6	36.6		
	12		21.8	33.1	33.1		15.6	23.7	23.7		
	16		15.0	22.8	22.8		11.4	17.3	17.3		
SO84.024.1xxx.8 (BG4)	4	40	30.0	48.1	48.1		26.0	41.6	41.6		10
	8		26.3	48.1	48.1		23.0	42.0	42.0		
	12		22.5	31.5	311.5		17.7	24.8	24.8		
	16		16.1	22.5	22.5		12.8	17.9	17.9		
SO84.032.1xxx.8 (BG4)	4	40	40.0	64.0	64.0		33.7	53.9	53.9		10
	8		35.0	64.0	64.0		30.6	55.9	55.9		
	12		30.0	42.0	42.0		23.6	33.0	33.0		
	16		21.4	29.9	30.0		17.0	23.8	23.8		

1) At max. 70% initial load

2) Shutdown as per I^2t characteristic

*All data apply for a motor cable length ≤10 m *) If supplied by drive controller, single-axis system*

***) If supplied by an active supply unit*

Table 4.3 Rated and peak current, SO84.016 to SO84.032 (liquid cooling)

DC axis controller	Power stage switching frequency [kHz]	Ambient temperature [°C]	At 678 V DC *)				At 770 V DC **)				For Time 2) [s]
			Rated current [A_{eff}]	Peak current [A_{eff}] 1) At rotating field frequency increasing linearly			Rated current [A_{eff}]	Peak current [A_{eff}] 1) At rotating field frequency increasing linearly			
				0 Hz	Up to 5 Hz	> 5 Hz		0 Hz	Up to 5 Hz	> 5 Hz	
S084.016.1xxx.8 (BG3)	4	40	20.0	33.6	33.6		20.0	33.6	33.6		10
	8		16.6	27.9	27.9		15.8	26.5	26.5		
	12		11.4	17.3	17.3		10.7	16.2	16.2		
	16		8.5	12.9	12.9		8.1	12.3	12.3		
S084.020.1xxx.8 (BG3)	4	40	25.0	42.0	42.0		25.0	42.0	42.0		10
	8		20.8	34.9	34.9		19.8	33.2	33.2		
	12		14.3	21.7	21.7		13.4	20.3	20.3		
	16		10.6	16.1	16.1		10.1	15.3	15.3		
S084.024.1xxx.8 (BG4)	4	40	26.0	41.6	41.6		26.0	41.6	41.6		10
	8		21.9	40.0	40.0		20.7	37.8	37.8		
	12		16.1	22.5	22.5		15.4	21.5	21.5		
	16		12.0	16.8	16.8		11.3	15.8	15.8		
S084.032.1xxx.8 (BG4)	4	40	32.5	52.0	52.0		32.0	51.2	51.2		10
	8		29.2	53.4	53.4		27.6	50.5	50.5		
	12		21.4	30.0	30.0		20.5	28.7	28.7		
	16		16.0	22.4	22.4		15.0	21.0	21.0		

1) At max. 70% initial load

2) Shutdown as per I^2t characteristic

All data apply for a motor cable length ≤10 m

**) If supplied by drive controller, single-axis system*

***) If supplied by an active supply unit*

4.4.4 Current carrying capacity, axis controller BG5 to BG6a, BG7 liquid cooling

DC axis controller	Power stage switching frequency [kHz]	Ambient temperature [°C]	At 565 V DC *) Rated current [A_{eff}]	At 565 V DC *) Peak current [A_{eff}] 1) At rotating field frequency increasing linearly: 0 Hz	Up to 5 Hz	> 5 Hz	At 650 V DC *) **) Rated current [A_{eff}]	At 650 V DC *) **) Peak current [A_{eff}] 1) At rotating field frequency increasing linearly: 0 Hz	Up to 5 Hz	> 5 Hz	Overload factor [%]	For time 2) [s]
S084.045.1xxx.8 (BG5)	4	40	53	90	90		49	83	83		170	30
	8		53	90	90		49	83	83			
	12		53	90	90		49	83	83			
	16		49	84	84		45	77	77			
S084.060.1xxx.8 (BG5)	4	40	70	120	120		65	111	111		170	30
	8		70	120	120		65	111	111			
	12		68	116	116		63	107	107			
	16		49	84	84		45	77	77			
S084.072.1xxx.8 (BG5)	4	40	84	144	144		78	133	133		170	30
	8		84	144	144		78	133	133			
	12		68	116	116		63	107	107			
	16		49	84	84		45	77	77			
S084.090.1xxx.8 (BG6a)	4	40	110	205	220		102	190	204		200	30
	8		110	166	187		102	153	173		170	
	12		110	132	165		102	122	153		150	
	16		90	106	135		83	98	125		150	
S084.110.1xxx.8 (BG6a)	4	40	143	231	286		132	214	264		200	30
	8		143	191	215		132	176	198		150	
	12		114	153	171		105	141	158		150	
	16		91	122	137		84	113	126		150	
S084.143.1xxx.8 (BG6a)	4	40	170	231	340		157	214	314		200	10
	8		170	191	255		157	176	236		150	
	12		136	153	204		126	141	189		150	
	16		109	122	164		101	113	152		150	
S084.170.1xxx.8 (BG6a)	4	40	210	231	336		194	214	310		160	10
	8		210	191	252		194	176	233		120	
	12		168	153	202		155	141	186		120	
	16		134	122	161		124	113	149		120	
S084.250.1xxx.8 (BG7)	2	45	250	425			231	393			170	30
	4			375				347			150	
S084.325.1xxx.8 (BG7)	2	45	325	552			301	511			170	30
	4			487				451			150	
S084.450.1xxx.8 (BG7)	2	45	450	765			416	707			170	30
	4			675				624			150	

1) At max. 70% initial load 2) Shutdown as per I^2t characteristic All data apply for a motor cable length ≤10 m

**) If supplied by drive controller, single-axis system **) If supplied by an active supply unit*

Table 4.4 Rated and peak current, S084.045 to S084.450 (liquid cooling)

DC axis controller	Power stage switching frequency [kHz]	Ambient temperature [°C]	At 678 V DC *) Rated current [A_{eff}]	Peak current [A_{eff}] 1) At rotating field frequency increasing linearly: 0 Hz	Up to 5 Hz	> 5 Hz	At 770 V DC **) Rated current [A_{eff}]	Peak current [A_{eff}] 1) At rotating field frequency increasing linearly: 0 Hz	Up to 5 Hz	> 5 Hz	Overload factor [%]	For time 2) [s]
S084.045.1xxx.8 (BG5)	4	40	48	82	82		48	82	82		170	30
	8		48	82	82		48	82	82			
	12		48	82	82		42	80	72			
	16		44	75	75		39	64	66			
S084.060.1xxx.8 (BG5)	4	40	63	107	107		63	107	107		170	30
	8		63	107	107		63	107	107			
	12		61	104	104		55	94	94			
	16		44	75	75		39	66	66			
S084.072.1xxx.8 (BG5)	4	40	76	130	130		76	130	130		170	30
	8		76	130	130		76	130	130			
	12		61	104	104		55	94	94			
	16		44	75	75		39	66	66			
S084.090.1xxx.8 (BG6a)	4	40	99	185	198		90	167	180		200	30
	8		99	149	168		90	134	153		170	
	12		99	119	149		90	107	135		150	
	16		81	95	122		73	86	110		150	
S084.110.1xxx.8 (BG6a)	4	40	129	207	258		116	186	232		200	30
	8		129	171	194		116	154	174		150	
	12		103	137	155		93	123	140		150	
	16		82	110	123		74	99	111		150	
S084.143.1xxx.8 (BG6a)	4	40	153	207	306		138	186	276		200	10
	8		153	171	230		138	154	207		150	
	12		122	137	183		110	123	165		150	
	16		98	110	147		88	99	132		150	
S084.170.1xxx.8 (BG6a)	4	40	189	207	302		170	185	272		160	10
	8		189	171	227		170	154	204		120	
	12		151	137	181		136	123	163		120	
	16		121	110	145		109	99	131		120	
S084.250.1xxx.8 (BG7)	2	45	225	383			210	357			170	30
	4			337				315			150	
S084.325.1xxx.8 (BG7)	2	45	293	497			273	464			170	30
	4			439				410			150	
S084.450.1xxx.8 (BG7)	2	45	405	689			378	643			170	30
	4			607				567			150	

) At max. 70% initial load 2) Shutdown as per I^2t characteristic All data apply for a motor cable length ≤10 m

**) If supplied by drive controller, single-axis system **) If supplied by an active supply unit*

Current carrying capacity, BG7 with HF function package (8 to 16 kHz)

NOTE:
Axis controllers with power stage switching frequencies from 8 to 16 kHz are devices with the "HF function package" (incl. an HF parameter data set) with a rotating field frequency from 0 to 1600 Hz.

DC axis controller	Power stage switching frequency [kHz]	Ambient temperature [°C]	At 565 V DC *)				At 650 V DC *) **)				Overload factor [%]	For time 2) [s]
			Rated current [A_{eff}]	Peak current [A_{eff}] 1) At rotating field frequency increasing linearly		Peak current [A_{eff}] 1) Intermittent operation	Rated current [A_{eff}]	Peak current [A_{eff}] 1) At rotating field frequency increasing linearly		Peak current [A_{eff}] 1) Intermittent operation		
				0 Hz	Up to 5 Hz	> 5 Hz		0 Hz	Up to 5 Hz	> 5 Hz		
S084.250.1xxx.8**7** (BG7)	8	45	250	250		375	231	231		347	150	30
	12		200	200		300	185	185		278	150	
	16		175	175		262	162	162		243	150	
S084.325.1xxx.8**7** (BG7)	8	45	325	325		488	301	300		452	150	30
	12		300	300		450	278	277		417	150	
	16		270	270		405	250	250		375	150	
S084.450.1xxx.8**7** (BG7)	8	45	450	450		675	416	416		624	150	30
	12		400	400		600	370	370		555	150	
	16		-	-		-	-	-		-	-	

1) At max. 70% initial load
2) Shutdown as per I^2t characteristic
All data apply for a motor cable length ≤10 m

**) If supplied by drive controller, single-axis system*
***) If supplied by an active supply unit*

Table 4.5 Rated and peak current S084.250 to S084.450 (liquid cooling, HF function package)

DC axis controller	Power stage switching frequency [kHz]	Ambient temperature [°C]	At 678 V DC *)				At 770 V DC **)				Overload factor [%]	For time 2) [s]
			Rated current [A_{eff}]	Peak current [A_{eff}] 1) At rotating field frequency increasing linearly		Peak current [A_{eff}] 1) Intermittent operation	Rated current [A_{eff}]	Peak current [A_{eff}] 1) At rotating field frequency increasing linearly		Peak current [A_{eff}] 1) Intermittent operation		
				0 Hz	Up to 5 Hz	> 5 Hz		0 Hz	Up to 5 Hz	> 5 Hz		
S084.250.1xxx.8**7** (BG7)	8	45	225	225		338	210	210		315	150	30
	12		180	180		270	168	168		252	150	
	16		157	158		235	147	147		221	150	
S084.325.1xxx.8**7** (BG7)	8	45	293	293		439	273	273		409	150	30
	12		270	270		405	252	252		378	150	
	16		243	243		365	227	227		340	150	
S084.450.1xxx.8**7** (BG7)	8	45	405	405		607	378	378		567	150	30
	12		360	360		540	336	336		504	150	
	16		-	-		-	-	-		-	-	

1) At max. 70% initial load
2) Shutdown as per I^2t characteristic
All data apply for a motor cable length ≤10 m

**) If supplied by drive controller, single-axis system*
***) If supplied by an active supply unit*

Table 4.6 Rated and peak current S084.250 to S084.450 (liquid cooling, HF function package)

ServoOne supply units BG5, BG6a and BG7

4.4.5 Current carrying capacity, supply unit (air and liquid cooling)

SO supply unit	Switching frequency of the power stage [kHz]	Ambient temperature [°C]	Rated current		Peak current		
			At 650 V DC [Aeff]	At 770 V DC [Aeff]	At 650 V DC [Aeff]	At 770 V DC [Aeff]	For time [s]
SO84.040.S (BG5)	12	40	40	34	76	68	10
SO84.076.S (BG5)	4	40	76	64	144	122	10
SO84.115.S (BG6a)	8	40	115	97	195	165	10
SO84.170.S (BG6a)	4	40	170	144	246	207	10
SO84.375.S (BG7)[1)]	4	40	375	325	565	487	10
SO84.540.S (BG7)[1)]	4	40	540	468	565	487	10

1) ... Supply units only available with liquid cooling.

Table 4.7 Current carrying capacity, supply unit SO84.040.S to SO84.540.S

4.5 Ambient conditions, ServoOne multi-axis system

Ambient conditions	
Degree of protection	IP20 except terminals (IP00), fan opening BG2 (ID10)
Health and safety regulations	According to local regulations (in Germany e.g. BGV A3)
Installation altitude	Up to 1000 m above MSL, higher with power reduction (1% per 100 m, max. 2000 m above sea level)
Pollution degree	2
Type of mounting	Built-in unit, only for vertical installation in a switch cabinet with min. degree of protection IP4x, if STO safety function used min. IP54

Climatic conditions		
In transit	As per EN 61800-2, IEC 60721-3-2 class 2K3 [1]	
	Temperature	-25 °C to +70 °C
	Relative atmospheric humidity	95% at max. +40 °C
In storage	As per EN 61800-2, IEC 60721-3-1 class 1K3 and 1K4 [2]	
	Temperature	-25 °C to +55 °C
	Relative atmospheric humidity	5 to 95%
In operation	As per EN 61800-2, IEC 60721-3-3 class 3K3 [3]	
	Temperature (air cooling)	**BG1:** -10 °C to +40 °C (4, 8, 12, 16 kHz)
		BG2 to BG4: -10 °C to +40 °C (4, 8, 12, 16 kHz),to 55 °C with power reduction (4%/°C)
		BG5 and BG6a: -10 °C to +40 °C (4, 8, 12, 16 kHz), to 55 °C with power reduction (2%/°C)
	Temperature (liquid cooling)	**BG3 and BG4:** -10 °C to +40 °C (4, 8, 12, 16 kHz),to 55 °C with power reduction (4%/°C)
		BG5 and BG6a: -10 °C to +40 °C (4, 8, 12, 16 kHz), to 55 °C with power reduction (2%/°C)
		BG7: -10 °C to +40 °C (2, 4, 8, 12, 16 kHz), to 55 °C with power reduction (2%/°C)
	Relative atmospheric humidity	5 to 85% without condensation

1) The absolute humidity is limited to max. 60 g/m³. This means, at 70 °C for example, that the relative atmospheric humidity may only be max. 40%.

2) The absolute humidity is limited to max. 29 g/m³. So the maximum values for temperature and relative atmospheric humidity stipulated in the table must not occur simultaneously.

3) The absolute humidity is limited to max. 25 g/m³. That means that the maximum values for temperature and relative atmospheric humidity stipulated in the table must not occur simultaneously.

Mechanical conditions			
Vibration limit in transit	As per EN 61800-2, IEC 60721-3-2 class 2M1		
	Frequency [Hz]	**Amplitude [mm]**	**Acceleration [m/s²]**
	$2 \leq f < 9$	3.5	Not applicable
	$9 \leq f < 200$	Not applicable	10
	$200 \leq f < 500$	Not applicable	15
Shock limit in transit	As per EN 61800-2, IEC 60721-3-2 class 2M1		
	Drop height of packed device max. 0.25 m		
Vibration limits for the system [1]	As per EN 61800-2, IEC 60721-3-3 class 3M1		
	Frequency [Hz]	**Amplitude [mm]**	**Acceleration [m/s²]**
	$2 \leq f < 9$	0.3	Not applicable
	$9 \leq f < 200$	Not applicable	1

1) Note: The devices are only designed for stationary use. The drive controllers must not be installed in areas where they would be permanently exposed to vibration.

4.6 Acceptance, ServoOne multi-axis system

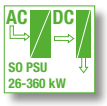

CE marking

The ServoOne multi-axis system conforms to the requirements of the Low Voltage Directive 2006/95/EC and the product standard EN 61800-5-1.

The axis controllers and supply units thus conform to the requirements for installation in a machine or plant under the terms of the Machinery Directive 2006/42/EC.

The axis controllers and supply units are accordingly CE marked. The CE marking on the rating plate indicates conformity with the above directives.

UL approval

UL approval has been obtained for the ServoOne multi-axis controllers.

Exception: supply units are only approved for BG5 and BG6a (40 A up to 179 A).

For details see document "UL-Certification" 0927.21B.X

Functional safety acceptances

See chapter 5.

EMC acceptance

All ServoOne axis controllers SO8x.xxx have an aluminium housing with an anodised finish (BG1 to BG4) or an aluminium rear panel made of galvanised sheet steel (BG5 to BG7) to enhance interference immunity (as per EN 61800-3, environment classes 1 and 2).

To limit conducted interference emissions to the permissible level and to comply with the EMC Directive 2004/108/EC, external filter sets are available for the supply units (see Technical data, supply units from Page 98).

STO acceptance

The “STO” (Safe Torque Off) safety function integrated into the ServoOne axis controller is certified according to the requirements of

- EN ISO 13849-1 “PL e” and
- EN 61508 / EN 62061 "SIL3".

Acceptance was undertaken by the accredited certification body, "TÜV Rheinland".

4.7 Technical data, ServoOne axis controller

Axis controllers 4 A to 6 A (BG1)

SO8_.___.1□□□._□□□

- Cooling (0 air, 8 liquid)
- DC supply
- Rated current
- Mains voltage

Type SO84.004.1 (air cooling)

Technical data / Designation		SO84.004.1	SO84.006.1
Output, motor side			
Voltage		3-phase $U_{ZK}/\sqrt{2}$	
Rated current, effective (I_N)	Air cooling	4 A [1]	6 A [1]
	Liquid cooling	BG1 not available with liquid cooling	
Peak current	Air cooling	See Table 4.1	
	Liquid cooling	BG1 not available with liquid cooling	
Rotating field frequency		0 ... 400 Hz	
Switching frequency of the power stage		4, 8, 12, 16 kHz	
DC input			
DC voltage (U_{ZK}) nominal [2]		565 V_{DC} / 650 V_{DC} / 678 V_{DC} / 770 V_{DC}	
Current (RMS approximate value) [3]		$1.7 \cdot I_{Motor}$ [A]	
Device connected load [3]		$U_{ZK} \cdot 1.7 \cdot I_{Motor}$ [kVA]	
Power dissipation at I_N	Air cooling	110 W [1]	140 W [1]
	Liquid cooling	BG1 not available with liquid cooling	
DC link			
Capacitance		60 µF	

1) Data referred to output voltage 400 V_{eff} and switching frequency 8 kHz

2) Generated from rectified TN system with earthed star point and phase voltages 3 x 400 V AC, 3 x 460 V AC or 3 x 480 V AC using the approved devices from KEBA (ServoOne AC servocontroller or supply unit). Insulation voltage as per EN 61800-5-1, system voltage 277 V, overvoltage category III.

3) Approximate value, max. values depending on DC voltage source and load case

Mechanics, BG1	S084.004.1	S084.006.1
Cooling method	Air cooling (wall-mounted)	
Degree of protection	IP20 except terminals (IP00)	
Cooling air temperature	40 °C	
Weight	3.4 kg	
Mounting method	Vertical mounting with unhindered air flow	
Row mounting of multiple axis controllers	Direct butt mounting, max. 2 mm	

Dimensions	BG1 [mm]
B (width)	58.5
H (height)	295 (without terminals)
T (depth)	224 (without terminals)
A	29.25
C / C1	382 / 5
D Ø	4.8
H1 / H2	392 / 38.5

Dimensional drawings, BG1 air cooling

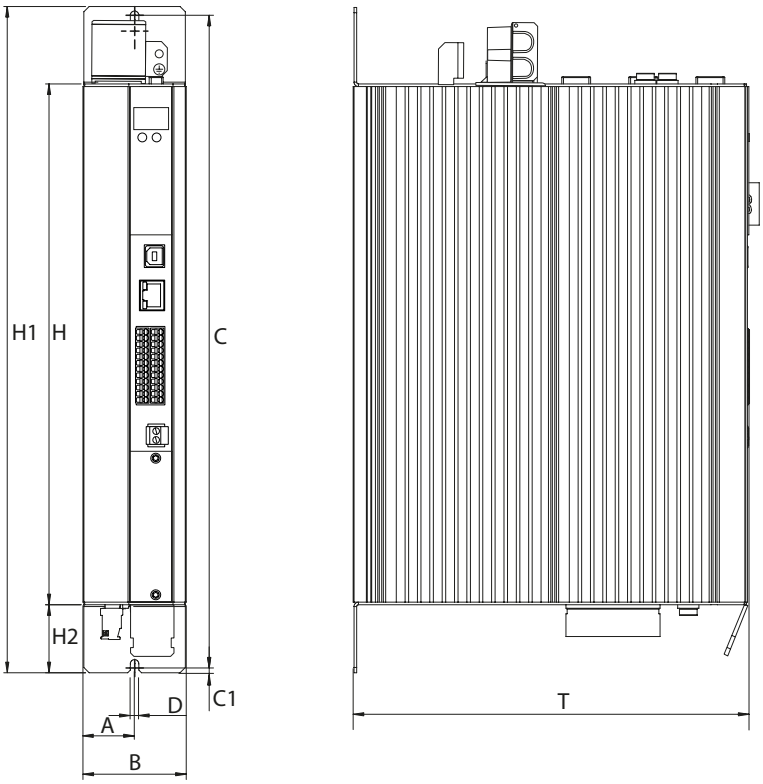

Technical data, axis controllers 8 A to 12 A (BG2)

Type SO84.008.1 (air cooling)

SO8_.___.1□□□._□□□

- Cooling (0 air, 8 liquid)
- DC supply
- Rated current
- Mains voltage

Technical data / Designation		S084.008.1	S084.012.1
Output, motor side			
Voltage		3-phase $U_{ZK}/\sqrt{2}$	
Rated current, effective (I_N)	Air cooling	9.3 A [1]	14 A [1]
	Liquid cooling	BG2 not available with liquid cooling	
Peak current	Air cooling	See Table 4.1	
	Liquid cooling	BG2 not available with liquid cooling	
Rotating field frequency		0 ... 400 Hz	
Switching frequency of the power stage		4, 8, 12, 16 kHz	
DC input			
DC voltage (U_{ZK}) nominal [2]		565 V_{DC} / 650 V_{DC} / 678 V_{DC} / 770 V_{DC}	
Current (RMS approximate value) [3]		$1.7 \cdot I_{Motor}$ [A]	
Device connected load [3]		$U_{ZK} \cdot 1.7 \cdot I_{Motor}$ [kVA]	
Power dissipation at I_N	Air cooling	185 W [1]	255 W [1]
	Liquid cooling	BG2 not available with liquid cooling	
DC link			
Capacitance		105 µF	

1) Data referred to output voltage 400 V_{eff} and switching frequency 8 kHz

2) Generated from rectified TN system with earthed star point and phase voltages 3 x 400 V AC, 3 x 460 V AC or 3 x 480 V AC using the approved devices from KEBA (ServoOne AC servocontroller or supply unit). Insulation voltage as per EN 61800-5-1, system voltage 277 V, overvoltage category III.

3) Approximate value, max. values depending on DC voltage source and load case

Mechanics, BG2	S084.008.1	S084.012.1
Cooling method	Air cooling (wall-mounted)	
Degree of protection	IP20 except terminals (IP00)	
Cooling air temperature	45 °C (at 4 kHz power stage switching frequency)	
Weight	4.9 kg	
Mounting method	Vertical mounting with unhindered air flow	
Row mounting of multiple axis controllers	Direct butt mounting, max. 2 mm	

Dimensions	BG2 [mm]
B (width)	90
H (height)	295 (without terminals)
T (depth)	224 (without terminals)
A	50
C / C1	382 / 5
D Ø	4.8
H1 / H2	392 / 38.5

Dimensional drawings, BG2 air cooling

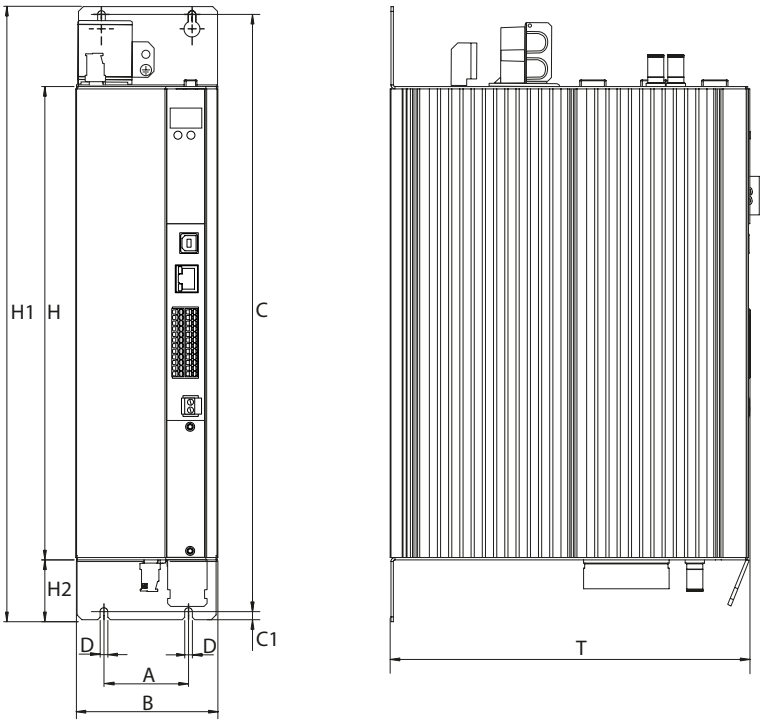

Technical data, axis controllers 16 A to 25 A (BG3)

SO8_.___.1□□□._□□□

- Cooling (0 air, 8 liquid)
- DC supply
- Rated current
- Mains voltage

Type SO84.016.1 (liquid cooling)

Technical data / Designation		S084.016.1	S084.020.1
Output, motor side			
Voltage		3-phase $U_{ZK}/\sqrt{2}$	
Rated current, effective (I_N)	Air cooling	16 A [1]	20 A [1]
	Liquid cooling	20 A [1]	25 A [1]
Peak current	Air cooling	See Table 4.1	
	Liquid cooling	See Table 4.3	
Rotating field frequency		0 ... 400 Hz	
Switching frequency of the power stage		4, 8, 12, 16 kHz (factory setting 8 kHz at 40 °C cooling air temperature)	
DC input			
DC voltage (U_{ZK}) nominal [2]		565 V_{DC} / 650 V_{DC} / 678 V_{DC} / 770 V_{DC}	
Current (RMS approximate value) [3]		$1.7 \cdot I_{Motor}$ [A]	
Device connected load [3]		$U_{ZK} \cdot 1.7 \cdot I_{Motor}$ [kVA]	
Power dissipation at I_N	Air cooling	320 W [1]	390 W [1]
	Liquid cooling[4]	390 W [1]	480 W [1]
DC link			
Capacitance		288 µF	

1) Data referred to output voltage 400 V_{eff} and switching frequency 8 kHz

2) Generated from rectified TN system with earthed star point and phase voltages 3 x 400 V AC, 3 x 460 V AC or 3 x 480 V AC using the approved devices from KEBA (ServoOne AC servocontroller or supply unit). Insulation voltage as per EN 61800-5-1, system voltage 277 V, overvoltage category III.

3) Approximate value, max. values depending on DC voltage source and load case

4) With liquid cooling typically 80% of the power dissipation is dissipated by the liquid chiller.

Mechanics, BG3	S084.016.1	S084.020.1
Cooling method	Air cooling (wall-mounted) or liquid cooling	
Degree of protection	IP20 except terminals (IP00)	
Cooling air temperature	45 °C (at 4 kHz power stage switching frequency)	
Weight	6.5 kg	
Mounting method	Vertical mounting with unhindered air flow	
Row mounting of multiple axis controllers	Direct butt mounting, max. 2 mm	

Dimensions	BG3 [mm]
B (width)	130
H (height)	295 (without terminals)
T (depth)	224 (without terminals)
A / A1 / A2	80 / 10 / 60
C / C1	382 / 5
D Ø	4.8
D1 Ø (bore for pipe fitting)	48
H1 / H2 / H3	392 / 38.5 / 70
S	3/8 inch (female thread)
T1	74

Dimensional drawings, BG3 air cooling

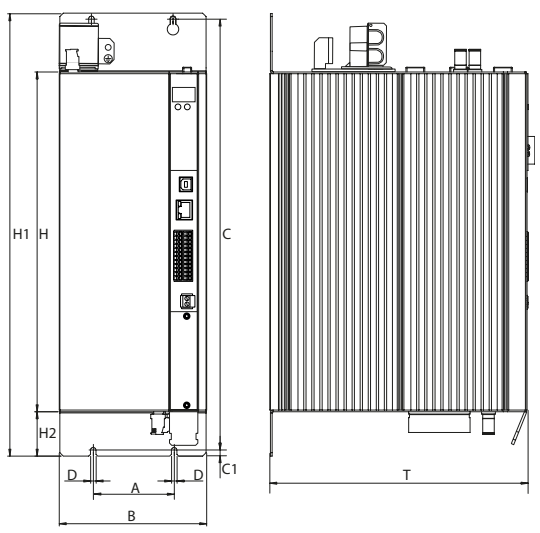

Dimensional drawings, BG3 liquid cooling

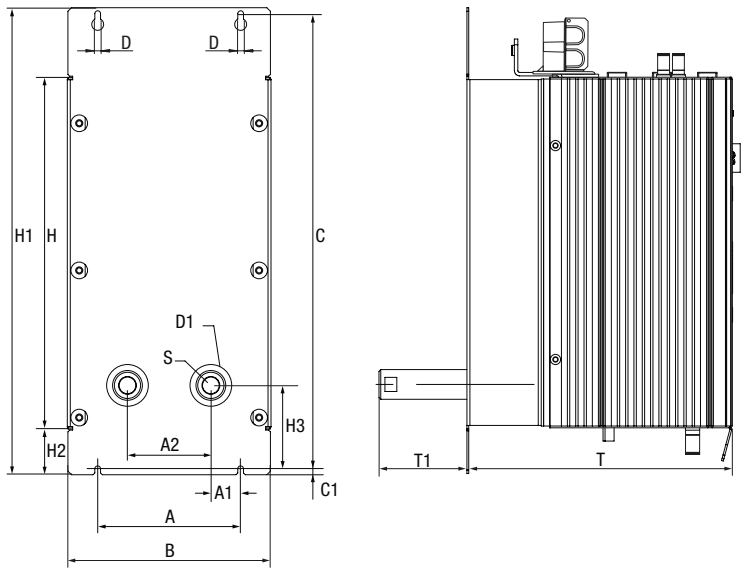

Technical data, axis controllers 24 A to 35 A (BG4)

Type SO84.024.1 (liquid cooling)

SO8_.___.1□□□._□□□

- Cooling (0 air, 8 liquid)
- DC supply
- Rated current
- Mains voltage

Technical data / Designation		SO84.024.1	SO84.032.1
Output, motor side			
Voltage		3-phase $U_{ZK}/\sqrt{2}$	
Rated current, effective (I_N)	Air cooling	24 A [1]	32 A [1]
	Liquid cooling	26.3 A [1]	35 A [1]
Peak current	Air cooling	See Table 4.2	
	Liquid cooling	See Table 4.6	
Rotating field frequency		0 ... 400 Hz	
Switching frequency of the power stage		4, 8, 12, 16 kHz (factory setting 8 kHz at 40 °C cooling air temperature)	
DC input			
DC voltage (U_{ZK}) nominal [2]		565 V_{DC} / 650 V_{DC} / 678 V_{DC} / 770 V_{DC}	
Current (RMS approximate value) [3]		$1.7 \cdot I_{Motor}$ [A]	
Device connected load [3]		$U_{ZK} \cdot 1.7 \cdot I_{Motor}$ [kVA]	
Power dissipation at I_N	Air cooling	420 W [1]	545 W [1]
	Liquid cooling[4]	455 W [1]	595 W [1]
DC link			
Capacitance		504 µF	

1) *Data referred to output voltage 400 V_{eff} and switching frequency 8 kHz*
2) *Generated from rectified TN system with earthed star point and phase voltages 3 x 400 V AC, 3 x 460 V AC or 3 x 480 V AC using the approved devices from KEBA (ServoOne AC servocontroller or supply unit). Insulation voltage as per EN 61800-5-1, system voltage 277 V, overvoltage category III.*
3) *Approximate value, max. values depending on DC voltage source and load case*
4) *With liquid cooling typically 80% of the power dissipation is dissipated by the liquid chiller.*

Mechanics, BG4	S084.024.1	S084.032.1
Cooling method	Air cooling (wall-mounted) or liquid cooling	
Degree of protection	IP20 except terminals (IP00)	
Cooling air temperature	45 °C (at 4 kHz power stage switching frequency)	
Weight	7.5 kg	
Mounting method	Vertical mounting with unhindered air flow	
Row mounting of multiple axis controllers	Direct butt mounting, max. 2 mm	

Dimensions	BG4 [mm]
B (width)	171
H (height)	295 (without terminals)
T (depth)	224 (without terminals)
A / A1 / A2	120 / 25 / 70
C / C1	382 / 5
D Ø	4.8
D1 Ø (bore for pipe fitting)	48
H1 / H2 / H3	392 / 38.5 / 70
S	3/8 inch (female thread)
T1	74

4

Dimensional drawings, BG4 air cooling

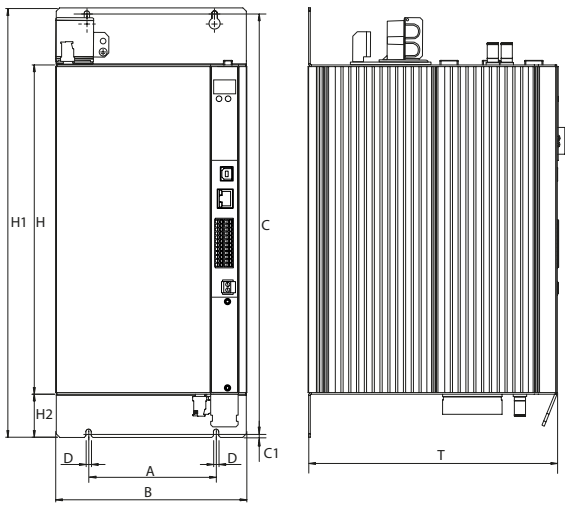

Dimensional drawings, BG4 liquid cooling

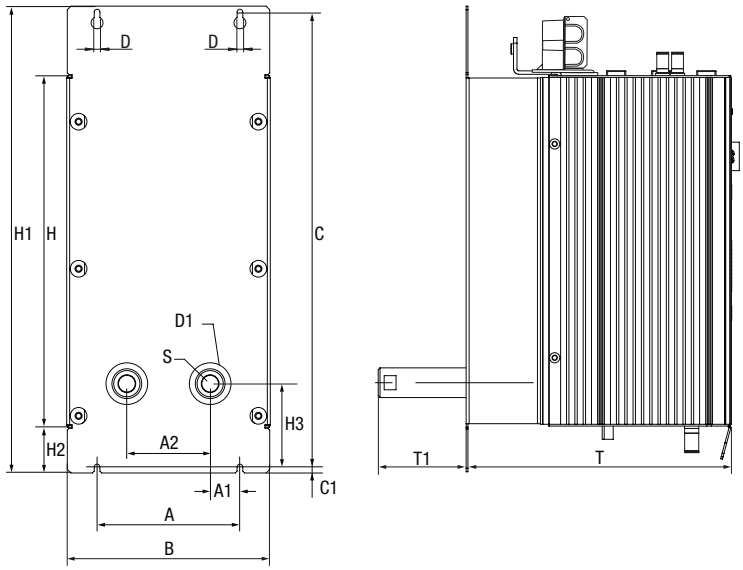

Technical data, axis controllers 45 A to 84 A (BG5)

Type SO84.045.1 (air cooling)

SO8_._____.1□□□._□□□

- Cooling (0 air, 8 liquid)
- DC supply
- Rated current
- Mains voltage

Technical data \ Designation		SO84.045.1	SO84.060.1	SO84.072.1
Output, motor side				
Voltage		3-phase $U_{ZK}/\sqrt{2}$		
Rated current, effective (I_N)	Air cooling	45 A [1]	60 A [1]	72 A [1]
	Liquid cooling	53 A [1]	70 A [1]	84 A [1]
Peak current	Air cooling	See Table 4.2		
	Liquid cooling	See Table 4.4		
Rotating field frequency		0 ... 400 Hz		
Switching frequency of the power stage		4, 8, 12, 16 kHz (factory setting 8 kHz at 40 °C cooling air temperature)		
DC input				
DC voltage (U_{ZK}) nominal [2]		565 V_{DC} / 650 V_{DC} / 678 V_{DC} / 770 V_{DC}		
Current (RMS approximate value) [3]		$1.2 \cdot I_{Motor}$ [A]		
Device connected load [3]		$U_{ZK} \cdot 1.2 \cdot I_{Motor}$ [kVA]		
Power dissipation at I_N	Air cooling	610 W [1]	830 W [1]	1010 W [1]
	Liquid cooling[4]	690 W [1]	930 W [1]	1130 W [1]
DC link				
Capacitance	Air cooling	430 µF	900 µF	
	Liquid cooling	900 µF		

1) *Data referred to output voltage 400 V_{eff} and switching frequency 8 kHz*
2) *Generated from rectified TN system with earthed star point and phase voltages 3 x 400 V AC, 3 x 460 V AC or 3 x 480 V AC using the approved devices from KEBA (ServoOne AC servocontroller or supply unit). Insulation voltage as per EN 61800-5-1, system voltage 277 V, overvoltage category III.*
3) *RMS value, max. values depending on DC voltage source and load case*
4) *With liquid cooling typically 80% of the power dissipation is dissipated by the liquid chiller.*

Mechanics, BG5	S084.045.1	S084.060.1	S084.072.1
Cooling method	Air cooling (wall-mounted) or liquid cooling		
Degree of protection	IP20 except terminals (IP00)		
Cooling air temperature	40 °C (at 4 kHz power stage switching frequency)		
Weight	13 kg		
Mounting method	Vertical mounting with unhindered air flow		
Row mounting of multiple axis controllers	Possible at a distance of 20 mm (air cooling) or 2 mm (liquid cooling)		

Dimensions	BG5 [mm]
B (width)	190
H (height)	345 (without terminals)
T (depth)	238 (without terminals)
A / A1 / A2	150 / 40 / 70
C / C1	406.5 / 6
D Ø (air/liquid cooling)	5.6 / 6.5
D1 Ø (bore for pipe fitting)	48
H1 / H2 / H3	418.5 / 15 / 54
S	3/8 inch (female thread)
T1	73.5

Dimensional drawings, BG5 air cooling

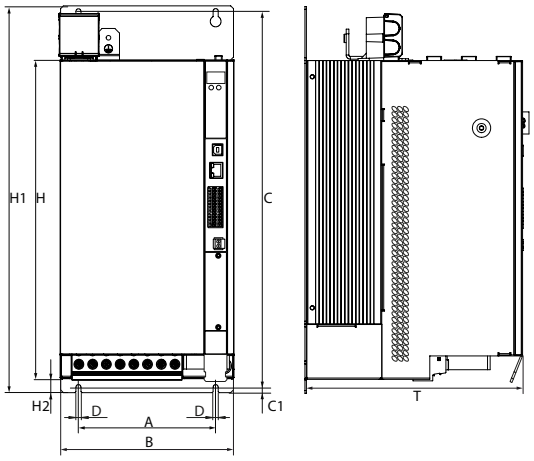

Dimensional drawings, BG5 liquid cooling

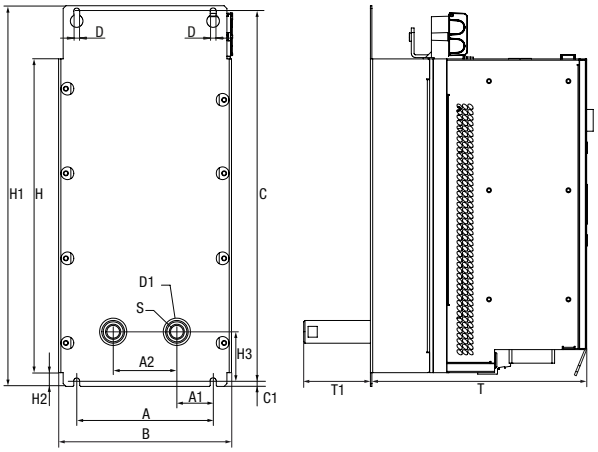

Technical data, axis controllers 90 A to 210 A (BG6a)

Type SO84.170.1 (air cooling)

SO8_._____.1□□□._□□□

- Cooling (0 air, 8 liquid)
- DC supply
- Rated current
- Mains voltage

Technical data / Designation		S084.090.1	S084.110.1	S084.143.1	S084.170.1
Output, motor side					
Voltage		3-phase $U_{ZK}/\sqrt{2}$			
Rated current, effective (I_N)	Air cooling	90 A [1]	110 A [1]	143 A [1]	170 A [1]
	Liquid cooling	110 A [1]	143 A [1]	170 A [1]	210 A [1]
Peak current	Air cooling	See Table 4.2			
	Liquid cooling	See Table 4.4			
Rotating field frequency		0 ... 400 Hz			
Switching frequency of the power stage		4, 8, 12, 16 kHz (factory setting 8 kHz at 40 °C cooling air temperature)			
DC input					
DC voltage (U_{ZK}) nominal [2]		565 V_{DC} / 650 V_{DC} / 678 V_{DC} / 770 V_{DC}			
Current (RMS approximate value) [3]		$1.2 \cdot I_{Motor}$ [A]			
Device connected load [3]		$U_{ZK} \cdot 1.2 \cdot I_{Motor}$ [kVA]			
Power dissipation at I_N and 8 kHz/ 565 V DC	Air cooling	1300 W	1600 W	2100 W	2500 W
	Liquid cooling[4]	1500 W	1940 W	2380 W	2650 W
DC link					
Capacitance	Air cooling	1060 µF	2120 µF	3180 µF	4240 µF
	Liquid cooling	2120 µF	3180 µF	4240 µF	

1) All data referred to output voltage 400 V_{eff} and switching frequency 8 kHz

2) Generated from rectified TN system with earthed star point and phase voltages 3 x 400 V AC, 3 x 460 V AC or 3 x 480 V AC using the approved devices from KEBA (ServoOne AC servocontroller or supply unit). Insulation voltage as per EN 61800-5-1, system voltage 277 V, overvoltage category III.

3) Approximate value, max. values depending on DC voltage source and load case

4) With liquid cooling typically 80% of the power dissipation is dissipated by the liquid chiller.

Mechanics, BG6a	S084.090.1	S084.110.1	S084.143.1	S084.170.1
Cooling method	Air cooling (wall-mounted) or liquid cooling			
Degree of protection	IP20 except terminals (IP00)			
Cooling air temperature	40 °C (at 4 kHz power stage switching frequency)			
Weight	32 kg			
Mounting method	Vertical mounting with unhindered air flow			
Row mounting of multiple axis controllers	Max. 2 mm, 40 mm between two BG6a devices with air cooling			

Dimensions	BG6a [mm]
B (width)	280
H (height)	540 (without terminals)
D (depth) (air/liquid cooling)	322 / 285 (without terminals)
A / A1 / A2	200 / 65 / 70
C / C1	581 / 10
D Ø	9.5
D1 Ø (bore for pipe fitting)	48
H1 (air/liquid cooling)	600 / 540
H2 / H3	20 / 56.5
S	3/8 inch (female thread)
T1	73.5

Dimensional drawings, BG6a air cooling

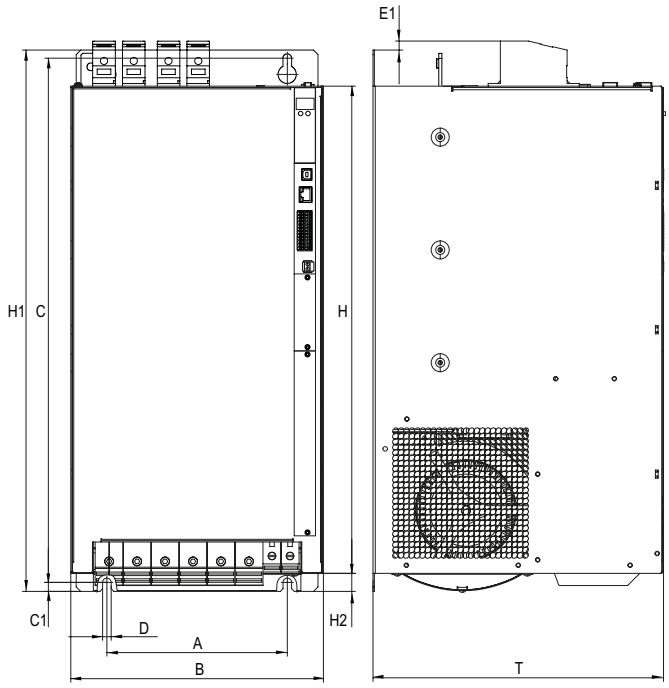

Dimensional drawings, BG6a liquid cooling

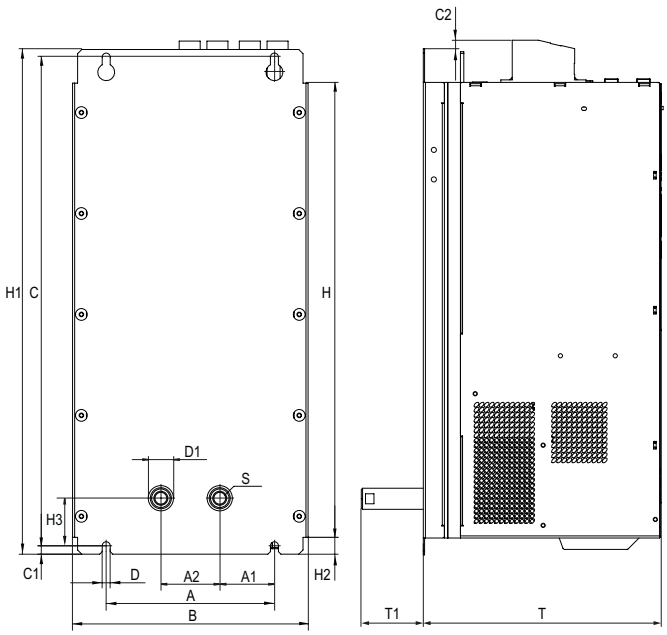

Technical data, axis controllers 250 A to 450 A (BG7)

Type SO84.250.1 (liquid cooling)

SO8_.___.1□□□._□□□

- Cooling (- air, 8 liquid)
- DC supply
- Rated current
- Mains voltage

Technical data / Designation		SO84.250.1	SO84.325.1	SO84.450.1
Output, motor side				
Voltage		3-phase $U_{ZK}/\sqrt{2}$		
Rated current, effective (I_N)		250 A [1]	325 A [1]	450 A [1]
Peak current	Liquid-cooled	See Table 4.5 and Table 4.6		
Rotating field frequency		0 ... 400 Hz (0 ... 1600 Hz)[6]		
Switching frequency of the power stage		2 and 4 kHz - factory setting 2 kHz - (8, 12, 16 kHz)[6]		
DC input				
DC voltage (U_{ZK}) nominal [2]		565 V_{DC} / 650 V_{DC} / 678 V_{DC} / 770 V_{DC}		
Current (RMS approximate value) [3] [4]		$1.2 \cdot I_{Motor}$ [A]		
Device connected load [3] [4]		$U_{ZK} \cdot 1.2 \cdot I_{Motor}$ [kVA]		
Power dissipation at I_N and 4 kHz/ 565 V_{DC} [5]		3200 W	3800 W	5400 W
DC link				
Capacitance		3600 µF	5400 µF	7200 µF

1) All data referred to output voltage 400 V_{eff} and switching frequency 4 kHz

2) Generated from rectified TN system with earthed star point and phase voltages 3 x 400 V AC, 3 x 460 V AC or 3 x 480 V AC using the approved devices from KEBA (ServoOne AC servocontroller or supply unit). Insulation voltage as per EN 61800-5-1, system voltage 277 V, overvoltage category III.

3) All data referred to DC voltage (U_{ZK}) 565 V_{DC}

4) Approximate value, max. values depending on DC voltage source and load case

5) With liquid cooling typically 80% of the power dissipation is dissipated by the liquid chiller.

6) See note

NOTE:

High-frequency drive controllers with an output rotating field frequency up to 1600 Hz need the HF function package at power stage switching frequencies 8 to 16 kHz.

Mechanics, BG7	S084.250.0	S084.325.0	S084.450.0
Cooling method	Liquid cooling		
Degree of protection	IP20 except terminals (IP00)		
Coolant temperature	Max. 40 °C, not more than 10 K below the ambient temperature		
Weight	100 kg		
Mounting method	Vertical mounting		
Row mounting of multiple servocontrollers	Direct butt mounting		

Dimensions	BG7 [mm]
B (width)	380 / 385 (with shield plate)
H (height)	855 / 1171 (with terminal cover) 1315 with shield plates
T (depth)	287 (without terminals)
A / A1 / A2	150 / 29 / 70
C / C1	952 / 14
D Ø	12
D1 Ø (bore for pipe fitting)	48
H1 / H2 / H3	979 / 62 / 124
S	3/8 inch (female thread)
T1	74

Dimensional drawings, BG7 liquid cooling

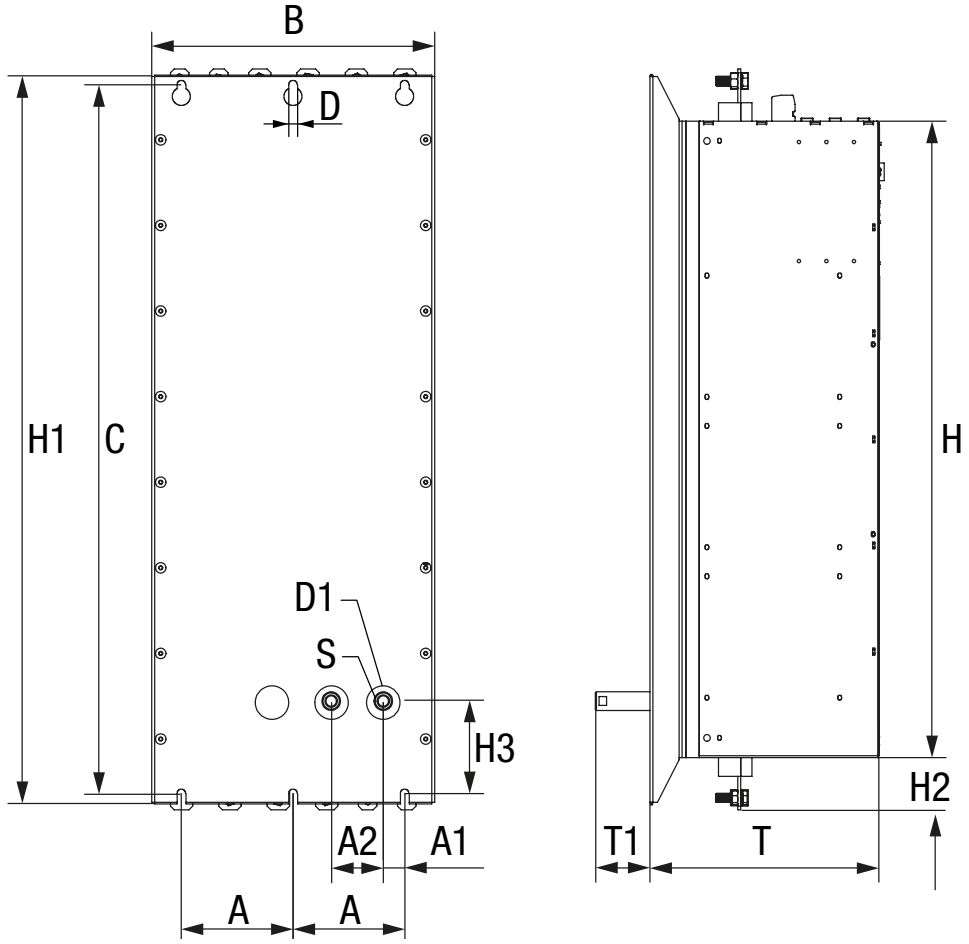

4.8 Technical data, supply units

Technical data, supply units 40 A to 76 A (BG5)

Type SO84.040.S (air cooling)

NOTE:
Project article! The supply units are only allowed to be used after system approval by KEBA. Please contact our application specialists on this issue.

Technical data / Designation		SO84.040.S	SO84.076.S
DC link output			
Voltage		650 V_{DC} / 770 V_{DC}	
Rated current, effective (I_N)	At 650 V_{DC}	40 A	76 A
	At 770 V_{DC}	34 A	64 A
Peak current (for 10 s)	At 650 V_{DC}	80 A	144 A
	At 770 V_{DC}	68 A	122 A
Continuous power		26 kW	50 kW
Peak power (for 10 s)		52 kW	94 kW
DC link capacitance [1]		900 µF	
Input mains			
Voltage		400 V_{AC} / 460 V_{AC} / 480 V_{AC} ±10%	
Continuous current, effective	At 400 V_{AC}	40 A	76 A
	At 460 / 480 V_{AC}	33 A	63 A
Peak current (for 10 s)	At 400 V_{AC}	80 A	144 A
	At 460 / 480 V_{AC}	67 A	120 A
Clock frequency		12 kHz	4 kHz
Continuous power		27.5 kW	52.5 kW
Power dissipation[2]		1010 W	
Asymmetry of the mains voltage		±3% max.	
Frequency		50/60 Hz	

1) The maximum overall capacitance of the multi-axis system DC link with a ServoOne supply unit BG5 (inclusive) must not exceed 10,000 µF.

2) With liquid cooling typically 80% of the power dissipation is dissipated by the liquid chiller.

Mechanics, BG5	S084.040.S	S084.076.S
Cooling method	Air cooling (wall-mounted) or liquid cooling	
Degree of protection	IP20 except terminals (IP00)	
Cooling air temperature	40 °C	
Weight	13 kg	
Mounting method	Vertical mounting with unhindered air flow	
Row mounting of multiple supply units	Direct butt mounting, max. 2 mm	

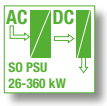

Dimensions	BG5 [mm]
B (width)	190
H (height)	345 (without terminals)
T (depth)	238 (without terminals)
A / A1 / A2	150 / 40 / 70
C / C1	406.5 / 6
D Ø (air/liquid cooling)	5.6 / 6.5
D1 Ø (bore for pipe fitting)	48
H1 / H2 / H3	418.5 / 15 / 54
S	3/8 inch (female thread)
T1	74

4

Dimensional drawings, BG5 air cooling	Dimensional drawings, BG5 liquid cooling

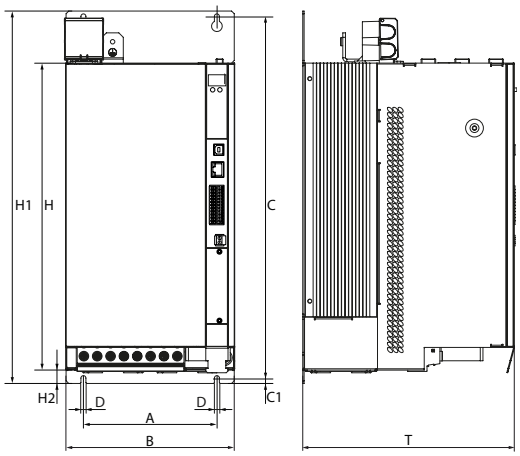

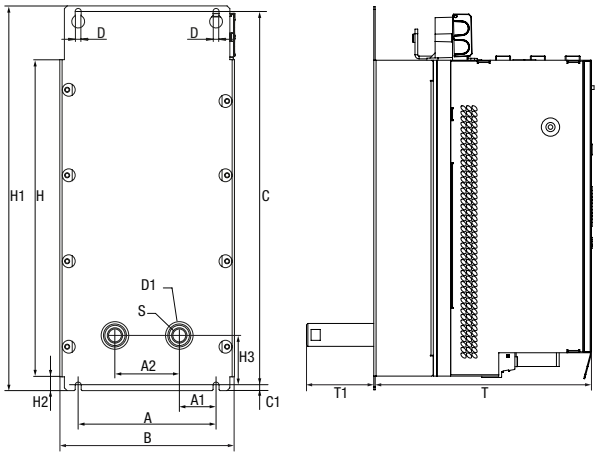

Supply unit	S084.040.S	S084.076.S
Mains connection	**LCL-040** Components included: • Mains filter FFU 3x56K • Input choke 40 A including capacitor • Step-up choke 40 A • EMC mounting set CU weight 8.3 kg	**LCL-076** Components included: • Mains filter FFU 3x80K • Input choke 76 A including capacitor • Step-up choke 76 A • EMC mounting set CU weight 17.5 kg

Technical data, supply units 115 A to 170 A (BG6a)

Type SO84.115.S (air cooling)

NOTE:
Project article! The supply units are only allowed to be used after system approval by KEBA. Please contact our application specialists on this issue.

Technical data / Designation		SO84.115.S	SO84.170.S
DC link output			
Voltage		650 V_{DC} / 770 V_{DC}	
Rated current, effective (I_N)	At 650 V_{DC}	115 A	170 A
	At 770 V_{DC}	97 A	144 A
Peak current (for 10 s)	At 650 V_{DC}	195 A	246 A
	At 770 V_{DC}	165 A	207 A
Continuous power		75 kW	110 kW
Peak power (for 10 s)		127 kW	160 kW
DC link capacitance [1]		4240 µF	
Input mains			
Voltage		400 V_{AC} / 460 V_{AC} / 480 V_{AC} ±10%	
Continuous current, effective	At 400 V_{AC}	115 A	170 A
	At 460 / 480 V_{AC}	96 A	142 A
Peak current (for 10 s)	At 400 V_{AC}	195 A	245 A
	At 460 / 480 V_{AC}	163 A	204 A
Clock frequency		8 kHz	4 kHz
Continuous power		80 kW	118 kW
Power dissipation[2]		2500 W	
Asymmetry of the mains voltage		±3% max.	
Frequency		50/60 Hz	

1) The maximum overall capacitance of the multi-axis system DC link with a ServoOne supply unit BG6a (inclusive) must not exceed 20000 µF.

2) With liquid cooling typically 80% of the power dissipation is dissipated by the liquid chiller.

Mechanics, BG6a	S084.115.S	S084.170.S
Cooling method	Air cooling (wall-mounted) or liquid cooling	
Degree of protection	IP20 except terminals (IP00)	
Cooling air temperature	40 °C	
Weight	32 kg	
Mounting method	Vertical mounting with unhindered air flow	
Row mounting of multiple supply units	Direct butt mounting, 40 mm between two BG6a devices with air cooling	

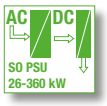

Dimensions	BG6a [mm]
B (width)	280
H (height)	540 (without terminals)
D (depth) (air/liquid cooling)	321 / 281 (without terminals)
A / A1 / A2	200 / 65 / 70
C / C1 / C2	581 / 10 / 10
D Ø	9.5
D1 Ø (bore for pipe fitting)	48
H1 / H2 / H3	600 / 20 / 56.5
S	3/8 inch (female thread)
T1	73.5

4

Dimensional drawings, BG6a air cooling

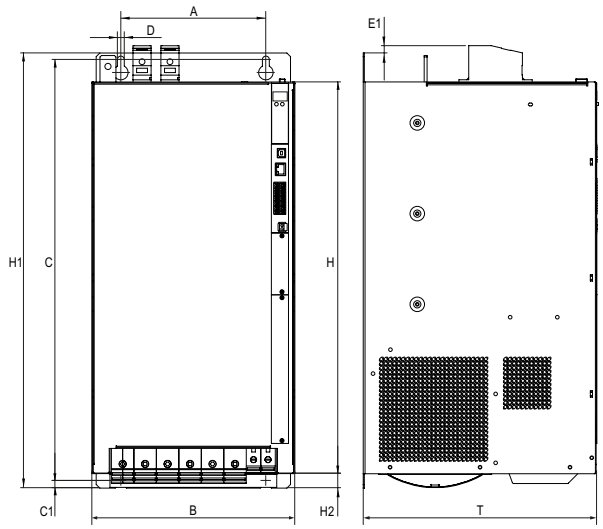

Dimensional drawings, BG6a liquid cooling

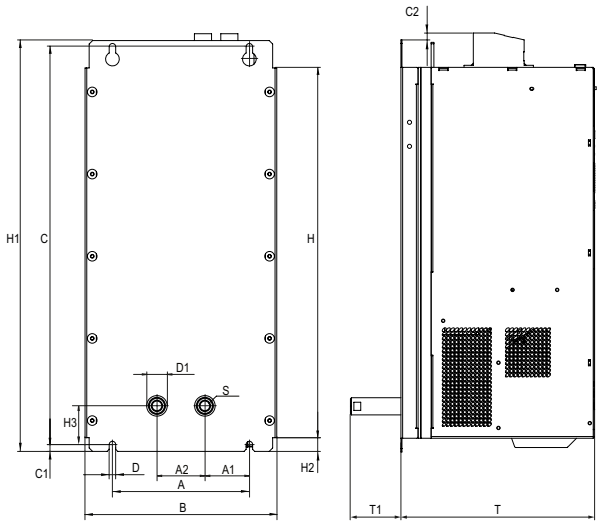

Supply unit	S084.115.S	S084.170.S
Mains connection	**LCL-115** Components included: • Mains filter FFU 3x130K • Input choke 115 A including capacitor • Step-up choke 115 A • EMC mounting set CU weight 23.7 kg	**LCL-170** Components included: • Mains filter FFU 3x180K • Input choke 170 A including capacitor • Step-up choke 170 A • EMC mounting set CU weight 37 kg

Technical data, supply units 375 A to 540 A (BG7)

Type SO84.375.S (liquid cooling)

NOTE:
Project article! The supply units are only allowed to be used after system approval by KEBA. Please contact our application specialists on this issue.

Technical data / Designation		SO84.375.S	SO84.540.S
DC link output			
Voltage		650 V_{DC} / 770 V_{DC}	
Rated current, effective (I_N)	At 650 V_{DC}	385 A	553 A
	At 770 V_{DC}	325 A	468 A
Peak current (for 10 s)	At 650 V_{DC}	577 A	577 A
	At 770 V_{DC}	487 A	487 A
Continuous power		250 kW	360 kW
Peak power (for 10 s)		375 kW	375 kW
DC link capacitance [1]		7200 µF	
Input mains			
Voltage		400 V_{AC} / 460 V_{AC} / 480 V_{AC} ±10%	
Continuous current, effective	At 400 V_{AC}	375 A	540 A
	At 460 / 480 V_{AC}	313 A	450 A
Peak current (for 10 s)	At 400 V_{AC}	565 A	565 A
	At 460 / 480 V_{AC}	470 A	565 A
Clock frequency		4 kHz	4 kHz
Continuous power		260 kW	374 kW
Power dissipation[2]		3300 W	4100 W
Asymmetry of the mains voltage		±3% max.	
Frequency		50/60 Hz	

1) The maximum overall capacitance of the multi-axis system DC link with a ServoOne supply unit BG6a (inclusive) must not exceed 20000 µF.

2) With liquid cooling typically 80% of the power dissipation is dissipated by the liquid chiller.

Mechanics, BG7	S084.375.S	S084.540.S
Cooling method	Liquid cooling (wall-mounted)	
Degree of protection	IP20 except terminals (IP00)	
Coolant temperature	5 °C to 40 °C (not more than 10 °C below ambient temperature)	
Weight	90 kg	
Mounting method	Vertical installation in a switch cabinet	
Row mounting of multiple supply units	Direct butt mounting, 40 mm between two BG7 devices	

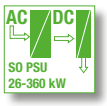

Dimensions	BG7 [mm]
B (width)	380 / 385 (with shield plate)
H (height)	855 / 1171 (with terminal cover) 1315 with shield plates
D (depth) (liquid cooling)	287 (without terminals)
A / A1 / A2	150 / 29 / 70
C / C1	952 / 14
D Ø	12
D1 Ø (bore for pipe fitting)	48
H1 / H2 / H3	979 / 62 / 124
S	3/8 inch (female thread)
T1	74

Dimensional drawings, BG7 liquid cooling

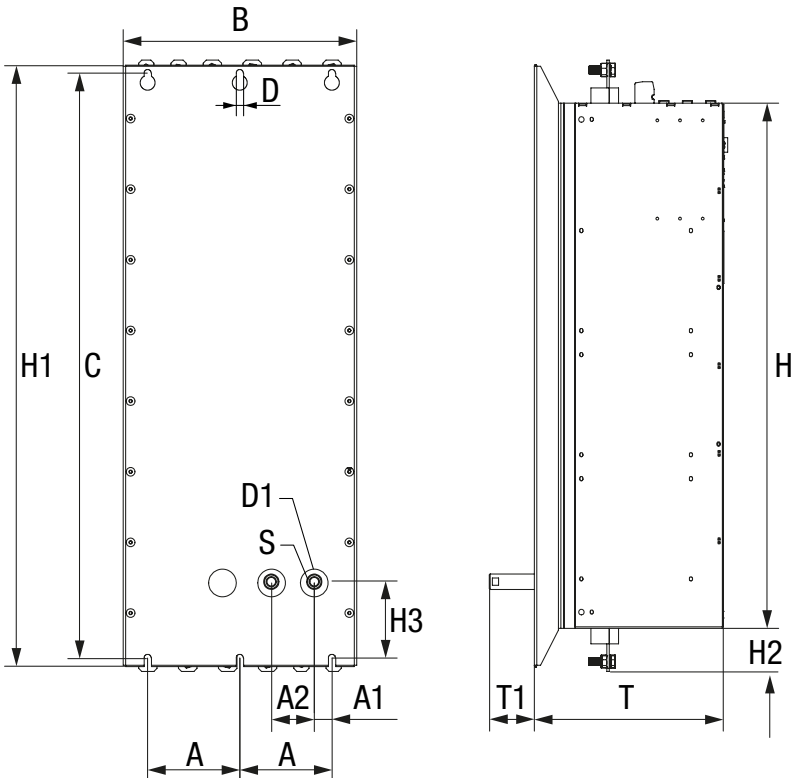

Supply unit	S084.375.S	S084.540.S
Mains connection	**LCL-375** Components included: • Mains filter FN 3359-400-99, 400 A • Input choke 375 A including capacitor • Step-up choke 375 A	**LCL-540** Components included: • Mains filter FN 3359-600-99, 600 A • Input choke 540 A including capacitor • Step-up choke 540 A

4.9 PSU mains connection sets

Type LCL-040 (example)

Designation	Type no.
S084.040.Sxxx.xxx1.x	LCL - 040
S084.076.Sxxx.xxx1.x	LCL - 076
S084.115.Sxxx.xxx1.x	LCL - 115
S084.170.Sxxx.xxx1.x	LCL - 170
S084.375.Sxxx.xxx1.x	LCL - 375
S084.540.Sxxx.xxx1.x	LCL - 540

NOTE:
Each set comprises: 1 step-up choke, 1 input choke with capacitor and 1 mains filter

4.10 Dimensions, step-up chokes

For size	BG5		BG6a		BG7	
For device	S084.040	S084.076	S084.115	S084.170	S084.375	S084.540
B (width)	239	299	365	380	540	454
H (height)	273	300	384	399	447	671
T (depth)	124	135	158	200	283	268
A	185	210	248	280	356	300
A1	75	95	122	127	144	188
D1	10 x 18	12 x 20	12 x 20	12 x 20	12 x 20	12 x 20
D2	-	-	-	-	13	13
Fastening screws	4 x M8	4 x M10	4 x M10	4 x M10	4 x M10	4 x M10
Weight [kg]	16	27	37.5	56	97	127

All dimensions in mm and not including terminals/connectors

AC DC SO PSU 26-360 kW

4

Dimensional drawings, step-up choke BG5 and BG6a

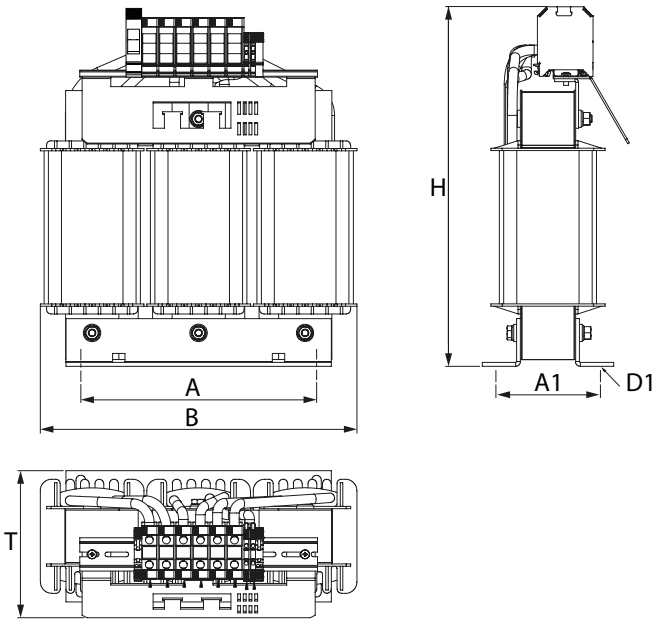

Dimensional drawings, step-up choke BG7

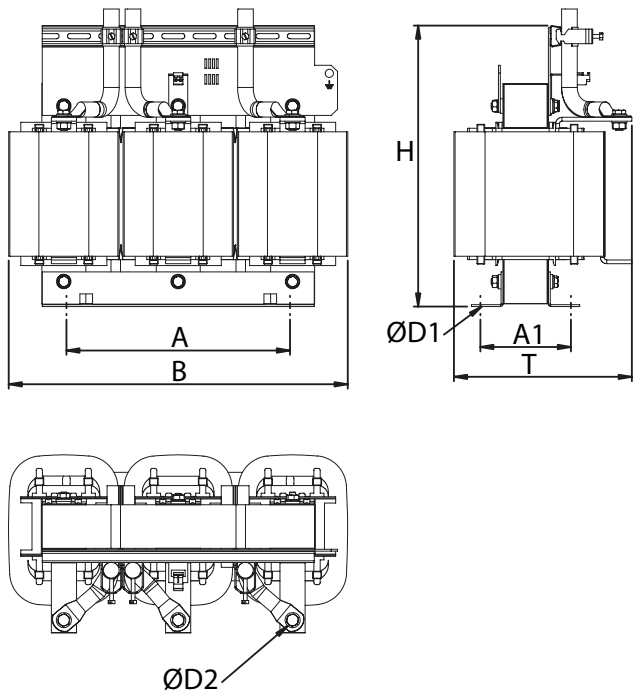

4.11 Dimensions, input choke including film capacitors

For size	BG5		BG6a		BG7	
For device	S084.040	S084.076	S084.115	S084.170	S084.375	S084.540
B (width)	289	289	347	348	297	357
H (height)	252	268	307	321	347	565
T (depth)	119	136	175	175	319	308
A	156	156	176	176	224	310
A1	63	80	95	95	145	146
D1	7 x 13	7 x 13	9 x 13	9 x 13	10 x 18	12 x 20
D2	-	-	-	-	13	13
Fastening screws	4 x M6	4 x M6	4 x M8	4 x M8	4 x M8	4 x M8
Weight [kg]	10.5	14	20	22	45	71

All dimensions in mm and not including terminals/connectors

Dimensional drawing, input choke including film capacitor BG5 and 6a

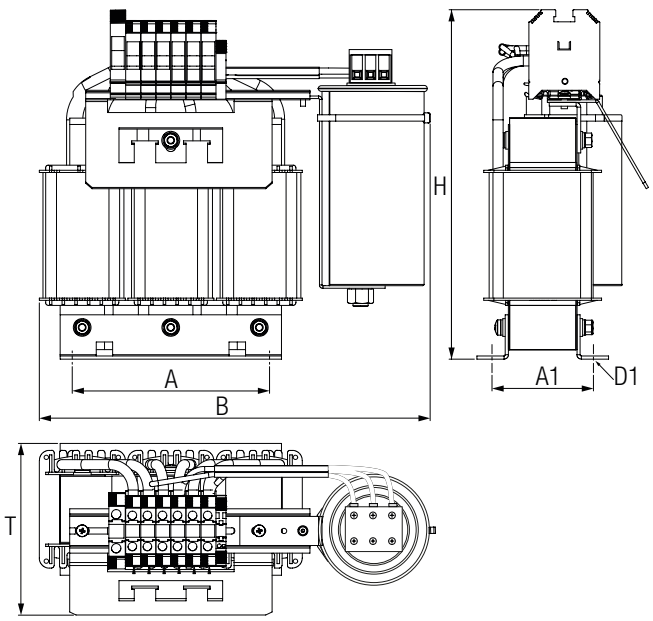

Dimensional drawing, input choke including film capacitor BG7

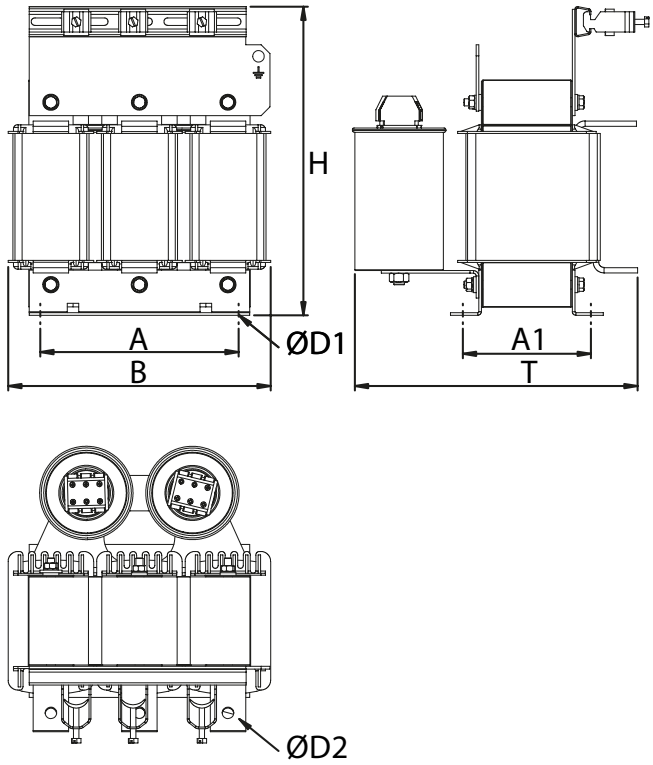

4.12 Dimensions, mains filters

For size	BG5		BG6a		BG7	
For device	S084.040	S084.076	S084.115	S084.170	S084.375	S084.540
Type	FFU 3 x 56 K	FFU 3 x 80 K	FFU 3 x 130 K	FFU 3 x 180 K	FN 3359-400-99	FN 3359-600-99
B (width)	85	80	90	130	260	260
H (height)	250	270	270	380	300	300
T (depth)	90	135	150	180	115	135
A	60	60	65	102	235	235
C	235	225	255	365	120	120
G Ø	5.4	6.5	6.5	6.5	12	12
Mounting screws	M5	M6	M6	M6	M10	M10
Weight [kg]	1.9	2.6	4.2	6.0	10.5	11

All dimensions in mm and not including terminals/connectors

AC DC SO PSU 26-360 kW

4

Dimensional drawings, mains filter BG5 and BG6a

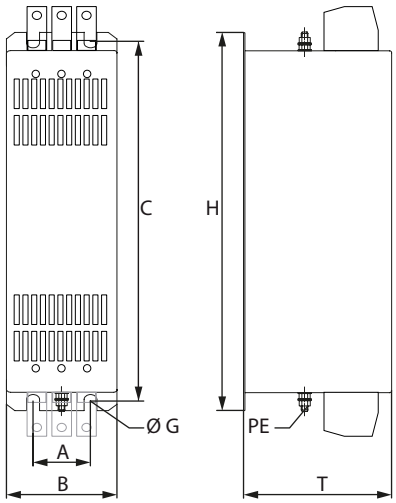

Dimensional drawings, mains filter BG7

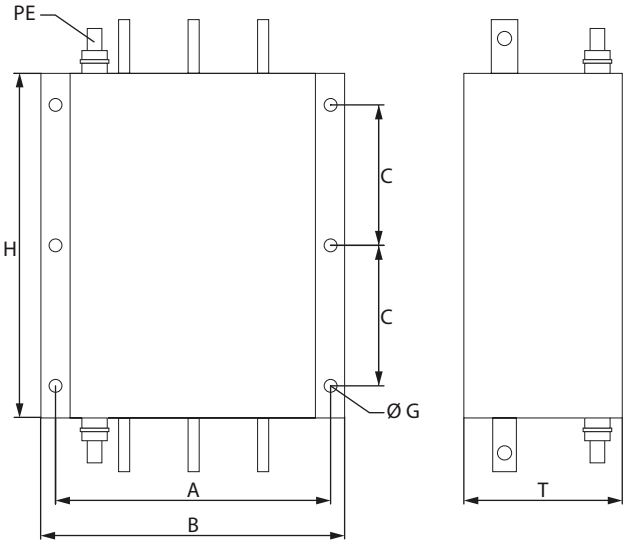

5 Safety technology

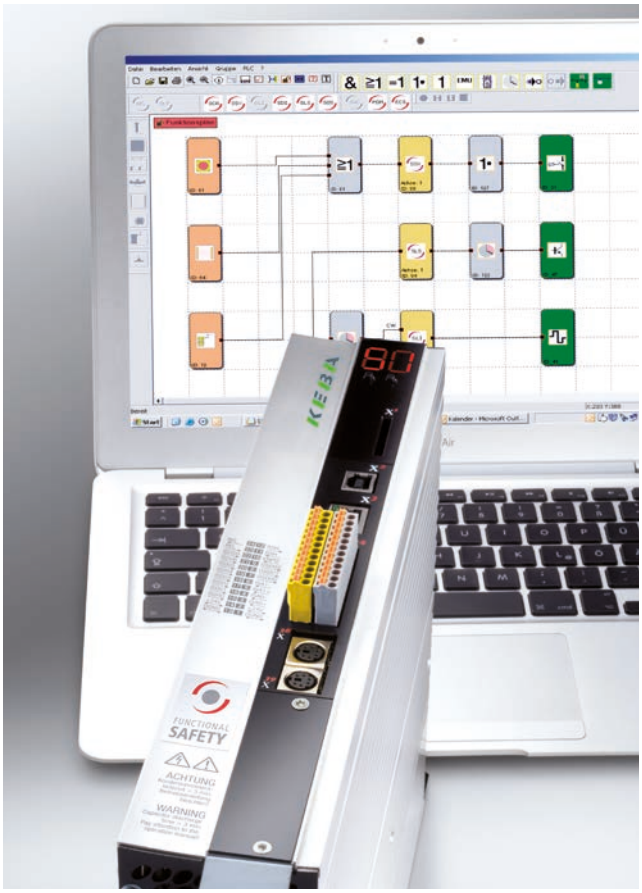

Type	Page	AC SO junior	AC SO 4-450 A	DC SO 4-450 A	AC DC SO PSU 26-360 kW
Integrated safety control	118	-	●1)	●1)	-

1) FS certification BG1 - BG5

NOTE:
The integrated safety control can only be ordered together with the drive controller.
It is always shipped ready-installed from the factory.

Accessories for the integrated safety control	From ...
PC programming software SafePLC S	Page 123
Dongle	Page 123
Network cable for Safe Cross Communication (SCC)	Page 123
I/O expansion module SMC-E12	Page 124
Connection cable for the SMC-E12 module	Page 124

5.1 Safety technology - integrated safety control

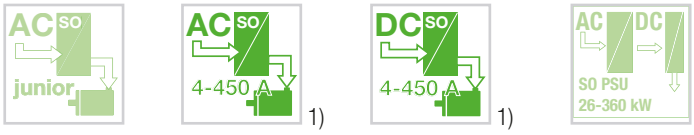

1) FS certification BG1 - BG5

S08□.□□□.□1□□.□□□□

Integrated safety control

Article designation

Brief description

The safety technology option includes a fully-featured safety control for machines, and has acceptance to the latest standards and the highest safety levels. The Safe Cross Communication feature enables data to be exchanged between up to six ServoOne devices.

NOTE:

Only available built-in ex factory. Only for devices up to and including SO84.072.

NOTE:

The acceptance for the ServoOne with integrated safety control is subject to the Machinery Directive 2006/42/EC. For this reason it is only permitted to place the safety control on the market in countries with the official languages German, English and Italian.

Features of the safety control that can be integrated

Safety functions (speed-dependent)		
STO	Safe Torque Off	6/1 per axis
SS1	Safe Stop 1	12 (optionally SS1 *or* SS2)
SS2	Safe Stop 2	
SLS	Safe Limited Speed	48 (optionally SLS *or* SLSmax)
SLSmax	Safe Limited Speed maximum	
SDI	Safe Direction	6/1 per axis
ECS	Encoder Supervisor	6/1 per axis
ESM	Encoder Standstill Monitoring	6/1 per axis
Safety functions (speed or position-dependent)		
SOS	Safe Operating Stop	6/1 per axis
SCA	Safe Cam	64
SLI	Safe Limited Increment	6/1 per axis
Safety functions (position-dependent)		
SLP	Safe Limited Position	12
SCA	Safe Cam	64
Sref	Safe reference	6
SEL	Safe Emergency Limit	6
Safety functions (brake)		
SBC	Safe Brake Control	1 per axis
Safety functions (brake)		
SCC	Safe Cross Communication	

PC software	
PC programming software SafePLC S	• Configuration • Programming • Validation
DriveManager	For details see Page 152
System	
Configuration mode	User-programmable safety control
Safety acceptance	SIL3 acc. to IEC 61508 / IEC 62061, PL e and cat 4 acc. to EN ISO 13849
Control hardware	
Safe digital inputs	4 [1]
Safe digital outputs	4 [1]
… of which usable as safe pulse outputs	4
Safe brake outputs	2 [1]
Safety sensors that can be connected	Light grids, emergency stops, guard doors, laser scanners; mode selector switches, guard locks, enable buttons, etc.
Standard analogue inputs (±10 V, 12 bits)	2
Standard digital inputs	6

1) SIL2; SIL3 with redundant use of the inputs/outputs (2-channel)

5.2 Additional safety technology terminal overview

System description

The ServoOne with integrated safety control provides a complete, freely programmable safety control system for safe operation of machines.

The Safe Cross Communication (SCC) feature enables up to six drives to be linked to form a network. This makes it possible to implement a complete machine safety solution independent of the controller. Via SCC, safety switching elements connected to the drives can be evaluated centrally in the safety master and status information exchanged.

For ease of operation of the safety control, the axis group is programmed and its parameters set by a program in the master drive, which also makes serial commissioning much easier. The PLC S programming software includes pre-programmed modules for all commonly used sensor, output and input types, so ensuring a high level of ease of use. This flexibility, in conjunction with the available encoder systems, allows the creation of innovative safety solutions for machines.

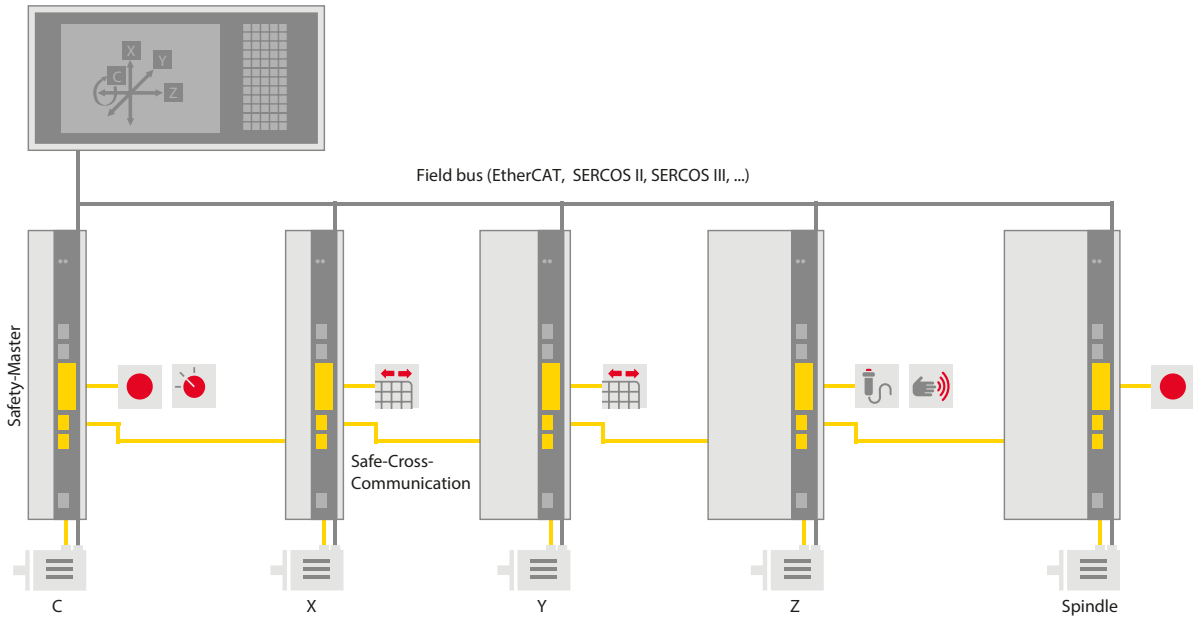

5.3 Accessories for the integrated safety control

5.3.1 PC programming software SafePLC S

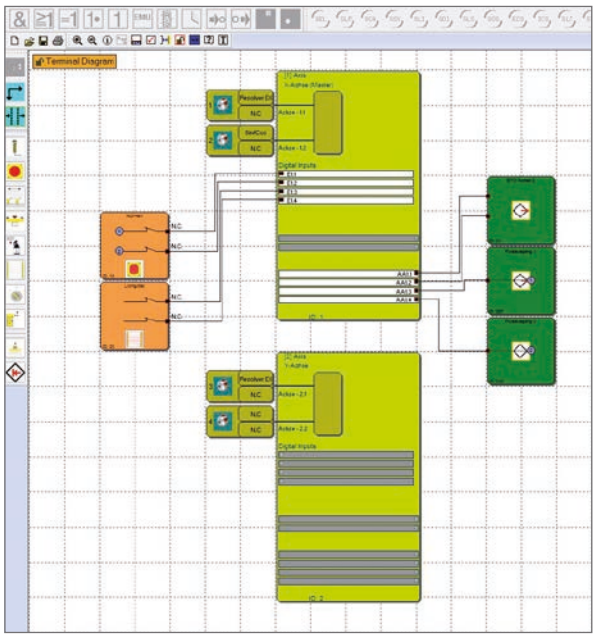

Hardware configuration

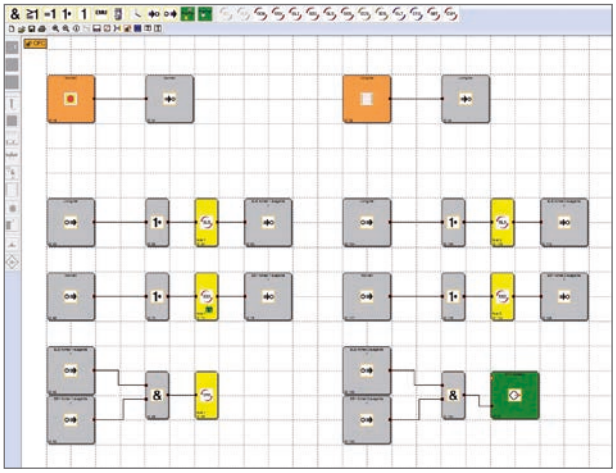

Programming

Technical data	PC programming software SafePLC S
Order designation	SafePLC S
Brief description	The graphic PC software SafePLC S is required to create the machine safety application. The entire safety solution for the machine can be programmed using only one program.
Sourcing	The programming software SafePLC S is only available for download free of charge on the KEBA homepage. A dongle is required to use the software.

Functions	Explanation
Hardware configuration	Selection by Drag-and-Drop of, among other features, the drive controllers, encoders, safety switching elements or safety outputs
Programming	Graphic programming of the machine safety solution using function blocks
Parameter configuration	Setting thresholds for the safety function blocks
Validation	Validation of the safety functionality programmed
Commissioning	Downloading the safety program to the drive controller and debugging or PC-based commissioning of the application
Languages	German, English
System requirements	PC with operating system Windows XP (SP2), Windows 7 (32/64 bits) or Windows 8 (32/64 bits)

5.3.2 Dongle

Technical data	Dongle
Order designation	SafePLC S dongle
Brief description	The USB dongle is necessary to authenticate the programmer as well as to prepare and change safety programs. The necessary USB driver is supplied together with the SafePLC S programming software.

5.3.3 SCC cable

Technical data	SCC cable
Order designation	Network cable for Safe Cross Communication (SCC)
Cable length	0.4 m
Connections	Ready to connect for networking ServoOne controllers with integrated safety control via Safe Cross Communication (SCC)
Cable diameter	6 mm

5.3.4 I/O expansion module SMC-E12

	I/O expansion module SMC-E12
Order designation	SMC-E12
Brief description	The SMC-E12 module expands the number of safe inputs and outputs on the safety control integrated in the ServoOne. Up to 2 SMC-E12 modules can be connected to the Safe Cross Communication (SCC) via the separately available connection cable SCC-08 IO.

Technical data	SMC-E12
Supply voltage, external	24 V (-15%+10%)
Safe inputs	12
Safe inputs or outputs (can be configured)	10
Pulse outputs	2
Type of connection	Plug-in terminals
Fastening	DIN rail mounting
Dimensions (HxDxW [mm])	100x115x68

5.3.5 Connection cable for the SMC-E12 module

Technical data	SCC-08 IO
Order designation	SCC-08 IO
Cable length	0.8 m
Connections	Ready to connect for connecting an SMC-E12 module to the Safe Cross Communication (SCC)
Cable diameter	6 mm

6 Option 1 - Communication

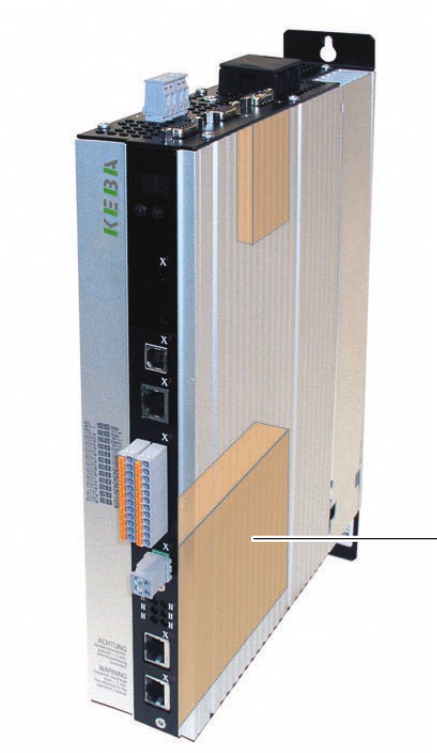

Type	Page	AC SO junior	AC SO 4-450 A	DC SO 4-450 A	AC DC SO PSU 26-360 kW
Field bus module for Sercos II	126	●	●	●	●
Field bus module for PROFIBUS-DPV1	127	●	●	●	●
Field bus module for EtherCAT	128	●	●	●	●
Field bus module for CANopen	129	●	●	●	●
Field bus module for CANopen plus 2 analogue outputs	130	-	●	●	-
Field bus module for PROFINET IRT (isochronous)	131	●	●	●	-
Field bus module for Sercos III	132	●	●	●	-
Field bus module for Powerlink*)	133	-	●	●	-

*) Upon request

NOTE:
Option 1 can only be ordered together with the drive controller. It is always shipped ready-installed from the factory.

6.1 Option 1 - Sercos II

sercos
the automation bus

Availability

SO□□.□□□.□□1□.□□□□

Sercos II

Article designation

Brief description
The interface conforms to IEC 61491 / EN 61491 for Sercos interfaces and ensures optimum interaction of digital drives and controllers from different manufacturers.

Technical data	Sercos II
Application note	AN17.2 (dated 11.02.2003)
Transfer rate	2/4/8 and 16 Mbit/s
Connections	1 transmitter, 1 receiver, fibre optic cables are compliant with the Sercos interface specification (version 2.4, February 2005)

The following table contains a selection of SERCOS documentation (publisher: sercos international).

Document title	Version
General Overview and architecture	(V1.1.1.1)
Generic Device profile	(V1.1.0.6)
SERCOS Communication	(V1.1.1.5)
Function specific profile drives	(V1.1.2.11)
SERCOS parameters	(V1.1.1.0)

NOTE:
Option 1 is only available built-in ex factory.
Sercos III is also available as option 1, for details see page 132.

6.2 Option 1 - PROFIBUS

Availability

SO□□.□□□.□□2□.□□□□

PROFIBUS	Article designation

Brief description
Communication interface for PROFIBUS-DPV1

Technical data	PROFIBUS
Standardisation	EN 50170
Communication	Guideline 2.082
Device profile	PROFIdrive V3.1
Transfer rate/cable length	9.6 kbit/s up to 1200 m 12 Mbit/s up to 100 m
Connection	PROFIBUS D-SUB connector 9-pin

NOTE:
Option 1 is only available built-in ex factory.

6

6.3 Option 1 - EtherCAT

Availability

SO□□.□□□.□□3□.□□□□

EtherCat

Article designation

Brief description
EtherCAT is an Ethernet-based, real-time capable, synchronous field bus system. It is classed as one of the fastest real-time Ethernet solutions for automation.

Technical data	EtherCAT
Standardisation	IEC 61158 / IEC 61784-2 / IEC 61800-7
Transfer rate	Up to 100 Mbit/s
Transfer medium	Standardised Ethernet to IEEE 802.3
Sampling time	≥125 µs
Synchronisation jitter	≤1 µs (distributed clocks)
Communication profile	CoE (CiA 301) (V1.0.2)
Device profile	CiA 402 (Rev. 2.0)
Network topology	Line, tree or star possible
Connection	RJ45 (shielded)
Cable type	CAT5

NOTE:
Only available built-in ex factory.

6.4 Option 1 - CANopen

Availability

SO□□.□□□.□□4□.□□□□

CANopen	Article designation

Brief description
Communication interface for CANopen, isolated from device electronics

Technical data	CANopen
Standardisation	ISO 11898 / IEC 61800-7
Communication	CiA 301 (Rev. 4.01)
Device profile	CiA 402 (Rev. 2.0)
Transfer rate/ cable length	20 kbit/s up to 1000 m 1 Mbit/s up to 40 m
Connections	2 x Phoenix Contact connectors (type FMC 1,5/5-ST-3,5 - GY RAL7042) 5-pin (as per CiA 303)
Supply voltage ext.	24 V ±20% (to IEC 61131-2)

NOTE:
Only available built-in ex factory.

6.5 Option 1 - CANopen + 2AO

plus

Analog out

X33

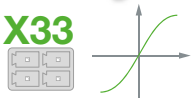

CANopen + 2AO

Availability

SO8□.□□□.□□5□.□□□□

Article designation

Brief description
Communication interface for CANopen (isolated from device electronics) and two analogue outputs (2AO)

Technical data	CANopen
Standardisation	ISO 11898
Communication	CiA 301 (Rev. 4.01)
Device profile	CiA 402 (Rev. 2.0)
Transfer rate/ cable length	20 kbit/s up to 1000 m 1 Mbit/s up to 40 m
Connections	2 x Phoenix Contact connectors (type FMC 1,5/5-ST-3,5-GY RAL7042) 5-pin (as per CiA 303)
Supply voltage ext.	24 V ±20% (to IEC 61131-2)

Technical data	2AO
Number of channels	2
Voltage range	±10 V differential
Current carrying capacity	Max. 3 mA, short-circuit proof
Resolution	12 bits
Accuracy	Max. ± 2% referred to 10 V, offset error < ± 0.1 V
Sampling time	125 µs
Connections	2 x Phoenix Contact connectors (type FMC 1,5/2-ST3,5-GY RAL7042)

NOTE:
Only available built-in ex factory.

6.6 Option 1 - PROFINET IRT

Availability upon request

SO8□.□□□.□□7□.□□□□

PROFINET IRT	Article designation

Brief description
The interface conforms to the international standards IEC 61158-5-10 and IEC 61158-6-10.

Technical data	PROFINET IRT
Communication	PROFINET I/O, V 2.2.4, Conformance Class C (isochronous)
Device profile	PROFIdrive
Sampling time	500 µs to 65 ms (multiples of 500 µs programmable)
Network topology	Line
Connection	RJ45 shielded
Cable type	CAT5

NOTE:
Only available built-in ex factory.

6.7 Option 1 - Sercos III

sercos
the automation bus

Availability

SO□□.□□□.□□8□.□□□□

Sercos III

Article designation

Brief description
The interface conforms to IEC 61491 / EN 61491 for Sercos interfaces and ensures optimum interaction of digital drives and controllers from different manufacturers. The basis for the Sercos III implementation in the ServoOne is the specification V1.1.2 from Sercos International.

Technical data	Sercos III
Application note	AN17.2 (dated 11.02.2003)
Communication profile	Sercos Communication (V1.1.2.1.7) (Sercos International)
Device profile	Generic Device profile (V1.1.2.1.1) (Sercos International)
Sampling time	125 µs to 65 ms (multiples of 125 µs programmable)
Network topology	Line or ring possible
Connection	RJ45 shielded
Cable type	CAT5e

NOTES:
Only available built-in ex factory. Sercos II is also available as option 1. For details see page 126.

6.8 Option 1 - Powerlink

ETHERNET POWERLINK

Availability

S0□□.□□□.□□9□.□□□□

Powerlink model (upon request) | Article designation

Brief description
Powerlink is an Ethernet-based bus system. Powerlink combines features and advantages of Ethernet, CANopen and real-time capabilities.

Technical data	EtherCAT
Standardisation	IEC 61158-2-12- to IEC 61158-6-22
Transfer rate	Up to 100 Mbit/s
Transfer medium	Standardised Ethernet to IEEE 802.3
Sampling time	≥500 µsec
Communication profile	EPSG DS301 (V1.10)
Device profile	CiA 402 (Rev. 2.0)
Network topology	Line
Connection	RJ45 (shielded)
Cable type	Cross-over cable Cat5

NOTE:
Restricted approval of the POWERLINK interface due to the following functionality:

Operation modes supported by the ServoOne single-axis system:

User mode	Description	PLCopen FBs
Profile position mode	Point-to-point movements (positioning) via the internal profile generator for the ServoOne	MC_MoveAbsolute, MC_MoveAdditive
Profile velocity mode	Speed control via the internal profile generator in the ServoOne	MC_NoveVelocity
Homing mode	Usage of the internal homing run modes 1...35+ KEBA-specific mode	MC_homw; MC_BR_InitHome_DS402AX
Necessary modification to the default configuration of the Powerlink communication: Based on experience, the default setting of 2000 ns in the parameter P269331[0] DLL_CNSoCJitterRange_U32 (corresponds to object 0x1C13 - DLL_CNSoLJitterRAnge_U32) is insufficient for reliable operation. We recommend increasing the setting to 10000 ns. Note: This setting is not the pre-setting in the openConformance Test.		

7 Option 2 - Technology

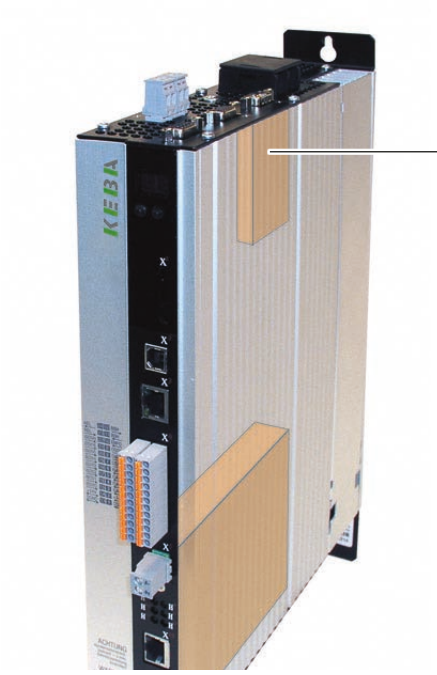

Type	Page	AC SO junior	AC SO 4-450 A	AC SO junior	AC DC SO PSU 26-360 kW
Interface for second SinCos encoder	136	●	●	●	-
Interface for TTL encoder simulation / TTL master encoder	137	●	●	●	-
Interface for TwinSync communication	138	●	●	●	-
Interface for SSI encoder simulation	139	-	●	●	-
Interface for TTL encoder with commutation signals	140	●	●	●	-
Interface for digital input/output expansion (DIO)	141	●	●	●	-
Interface for multi-functional input/output expansion (MIO)	142	●	●	●	-
Interface for second safe SinCos encoder	143	-	●	●	-
Interface for second safe SSI encoder	144	-	●	●	-
Interface for second safe axis monitor (SinCos)	145	-	●	●	-
Interface for one-cable interface	146	●	-	-	-

NOTE:
Option 2 - Technology can only be ordered together with the drive controller. It is always shipped ready-installed from the factory.

7.1 Option 2 - second SinCos encoder

Second SinCos encoder

Availability	
●	Operable without integrated safety control
-	Operable with integrated safety control

S0□□.□□□.□□□1.□□□□

Article designation

Brief description
This option enables parallel evaluation of two SinCos encoders. Evaluation of only one SinCos encoder is included in the device standard (connection via X7). For details about the encoder types supported, refer to chapter 1 section "Functions of the ServoOne devices ->Technology options".

Technical data	SinCos encoder
Signals	A/B, zero pulse
Signal level	SinCos, 1 V_{PP} + analogue zero pulse
Signal frequency	500 kHz max.

Technical data	Absolute value encoder
Signals	Data, CLK
Signal level	RS485-compliant
Switching frequency EnDat	2 MHz max.
Switching frequency SSI	1 MHz max.

Technical data	General
Supply voltage ext. encoder, SinCos, SSI, EnDat	5 V ±5% / 250 mA
Cable length	50 m max. (ServoOne junior 30 m max.)
Characteristic terminating impedance	120 Ω (integrated)

NOTE:
Only available built-in ex factory.

7.2 Option 2 - TTL encoder simulation / TTL master encoder

TTL encoder simulation / TTL master encoder

Availability	
●	Operable without integrated safety control
-	Operable with integrated safety control

S0□□.□□□.□□□2.□□□□

Article designation

Brief description
This option permits a TTL encoder simulation of an encoder connected and/or the connection of a TTL master encoder. The following operation modes are possible: • Evaluation of an TTL encoder • Simulation of a TTL encoder (signals from other encoders are converted into TTL signals and made available as output signals) • TTL repeater: evaluation of encoder connected to X7 or X8 and direct floating transmission via encoder simulation

Technical data	TTL encoder simulation
Signals	A/B, zero pulse
Signal level	TTL differential (RS422), electrically isolated from the drive controller
Signal frequency	1 MHz max.

Technical data	TTL master encoder
Signals	A/B, zero pulse or pulse/direction
Signal level	TTL differential (RS422)
Signal frequency	500 kHz max.

Technical data	General
Supply voltage ext. encoder	5 V ±5% / 250 mA
Cable length	10 m max.
Characteristic terminating impedance	120 Ω (integrated)

NOTE:
Only available built-in ex factory.

7

7.3 Option 2 - TwinSync communication

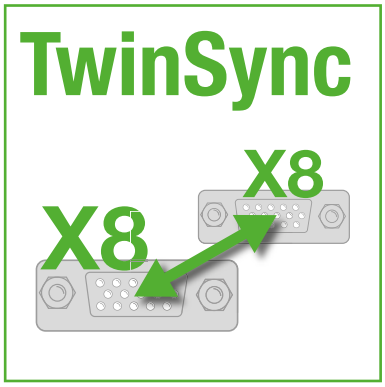

TwinSync communication

Availability	
●	Operable without integrated safety control
●	Operable with integrated safety control

S0□□.□□□.□□□3.□□□□

Article designation

Brief description

Using the TwinSync option two drives can be synchronised in master/slave mode. The data mapping for bidirectional cyclic communication between the drives can be flexibly configured in the parameters. The master drive can transmit setpoint (reference) values and control information for the slave drive via TwinSync.

Technical data	TwinSync communication
Signal level	TTL differential (RS422), electrically isolated from the drive controller
User data	8 bytes bidirectional, spread across max. three objects
Transfer mode	Asynchronous, synchronised via Sync pulse
Transfer rate	Max. 8 kHz
Cable length	Max. 10 m
Characteristic terminating impedance	120 Ω (integrated)

NOTE:
Only available built-in ex factory.

TwinSync connection cable

Technical data	TwinSync cable
Order designation	KTS-S0-010
Cable length	1 m
Connections	2 x SUB-D 9-pin male
Cross-section	4 x 2 x 0.25 + 2 x 0.50

7.4 Option 2 - SSI encoder simulation

SSI encoder simulation

Availability	
●	Operable without integrated safety control
-	Operable with integrated safety control

S0□□.□□□.□□□4.□□□□

Article designation

Brief description
This option permits the simulation of an SSI encoder for the output of position information. The length and the protocol for SSI data transfer can be flexibly configured in the parameters. Synchronisation of the control cycle to the external SSI clock signal is possible as an option.

Technical data	SSI encoder simulation
Signal level	TTL differential (RS422), electrically isolated from the drive controller
Baud rate	250, 500, 750, 1000 kBaud
Coding	Gray, binary
Cable length	Max. 10 m
Characteristic terminating impedance	120 Ω (integrated)

NOTE:
Only available built-in ex factory.

7

7.5 Option 2 - TTL encoder with commutation signals

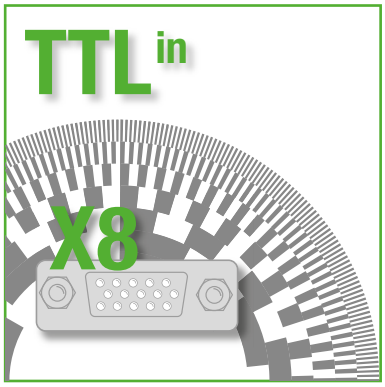

TTL encoder with commutation signals

Availability	
●	Operable without integrated safety control
-	Operable with integrated safety control

S0□□.□□□.□□□5.□□□□

Article designation

Brief description
This option permits the evaluation of a TTL encoder with additional 120° phase-shifted differential commutation signals.

Technical data	TTL encoder with commutation signals
Signals	A/B tracks, zero pulse, U, V, W commutation signals
Signal level	TTL differential (RS422)
Signal frequency	500 kHz max.
Supply voltage ext. encoder	5 V ±5% / 250 mA
Cable length	10 m max.
Characteristic terminating impedance	120 Ω (integrated)

NOTE:
Only available built-in ex factory.

TTL connection cable

Technical data	TTL master-slave cable		
Order designation (article no.)	KEG-SO-X8-0030 (0980.9156)	KEG-SO-X8-0060 (0980.9157)	KEG-SO-X8-0090 (0980.9158)
Cable length	0.3 m	0.6 m	0.9 m
Connections	Option 2 (X8), TTL encoder simulation / TTL master encoder		

7.6 Option 2 - digital input/output expansion (DIO)

Digital input/output expansion (DIO)

Availability	
●	Operable without integrated safety control
-	Operable with integrated safety control

SO□□.□□□.□□□8.□□□□.x

Article designation

Brief description
This technology option expands the digital inputs and outputs on the option slot 2 (Technology). The desired function can be configured as required in the parameters equivalent to the standard inputs and outputs.

Technical data	Digital input/output expansion (DIO)
Number of inputs	4 (floating in relation to control electronics)
Number of outputs	8 (floating in relation to control electronics)
Signal level, inputs	+24 V DC +20%; Low/High: ≤4.8 V/ ≥18 V
Signal frequency, inputs	<500 Hz
Signal level, outputs	+24 V DC, Imax = 100 mA
Sampling rate, outputs	1 ms
Supply voltage, input	24 V DC ±20%

NOTE:
Only available built-in ex factory.

Digital IO cable

Technical data	Digital IO cable
Order designation	DIOC-KS002
Cable length	2 m (not including connector or flying leads)
Connectors/connections	End A: Sub-D, 15-pin, male, high-density, metal housing End B: flying lead, 20 cm, stripped with heatshrink sleeve
Cable type/cross-section	6 x 2 x 0.25 + 2 x 0.5 mm² ROHS, UL compliant

7.7 Option 2 - multi-functional input/output expansion (MIO)

Multi-functional input/output expansion (MIO)

Availability	
●	Operable without integrated safety control
-	Operable with integrated safety control

S0□□.□□□.□□□6.□□□□.x

Article designation

Brief description
The technology option "MIO" expands the digital inputs and outputs on the option slot 2 (Technology). The desired function can be configured as required in the parameters equivalent to the standard inputs and outputs.

Technical data	Digital input/output expansion (MIO)
2 differential, analogue inputs	-10 V ...+10 V or 0(4) ...20 mA Inputs can be selected as current or voltage inputs!
1 analogue output (floating)	0 ... 10 V, short-circuit proof (shutdown if there is a short circuit)
4 digital inputs	PLC-compatible
2 digital outputs	PLC-compatible, short-circuit proof (no damage on short circuit)
10.5 V supply voltage	50 mA
24 V DC supply voltage	Power feed, polarity reversal protection

Multi-functional I/O cable

Technical data	Multi-functional I/O cable
Order designation	MIOC-KS00x
Cable length	2 m (not including connectors or flying leads, cable colour: grey)
Connectors/connections	End A: Sub-D, 15-pin, female, "high-density", metal housing End B: Sub-D, 15-pin, male, "high-density", metal housing
Cable type/cross-section	Preferred type/standard: LAPP KABEL Stuttgart UNITRONIC LiYCY (TP) 8 x 2 x 0.25 mm² ROHS, (ready-made)

7.8 Option 2 - second safe SinCos encoder

Second safe SinCos encoder

Availability	
-	Operable without integrated safety control
●	Operable with integrated safety control

S08□.□□□.□□□A.□□□□

Article designation

Brief description
This option permits evaluation of a second SinCos encoder. Evaluation of only one safe SinCos encoder is included in the device standard (connection via X7). The option permits evaluation of the SinCos encoder as a second safe channel for the drive axis.

Technical data	Safe SinCos encoder
Signals	A/B
Signal level	SinCos, 1 V_{PP}
Signal frequency	400 kHz max.

Technical data	General
Supply voltage, ext. encoder, SinCos	5 V ±5% / 250 mA
Cable length	15 m
Characteristic terminating impedance	120 Ω (integrated)

NOTE:
Only for devices with safety technology option. Only available built-in ex factory.

7

7.9 Option 2 - second safe SSI encoder

Second safe SSI encoder

Availability	
-	Operable without integrated safety control
●	Operable with integrated safety control

S08□.□□□.□□□B.□□□□

Article designation

Brief description
This option permits evaluation of a second SSI encoder. Evaluation of only one safe SSI encoder is included in the device standard (connection via X7). The option permits evaluation of the SSI encoder as a second safe channel for the drive axis. Evaluation of a second SSI channel allows use of the SLP (Safe Limited Position) function, subject to certain safety constraints.

Technical data	Absolute value encoder
Signals	Data, CLK
Signal level	RS485-compliant
Switching frequency SSI	1 MHz max.

Technical data	General
Supply voltage ext. encoder	No encoder supply
Cable length	15 m
Characteristic terminating impedance	120 Ω (integrated)

NOTE:
Only for devices with safety technology option. Only available built-in ex factory.

7.10 Option 2 - second safe axis monitor (SinCos)

Second safe axis monitor (SinCos)

Availability	
-	Operable without integrated safety control
●	Operable with integrated safety control

S08□.□□□.□□□C.□□□□

Article designation

Brief description
This option permits safe evaluation of an external drive axis. The encoder must be a safe encoder, as it can only be evaluated over one channel.

Technical data	SinCos encoder
Signals	A/B
Signal level	SinCos, 1 V_{PP}
Signal frequency	400 kHz max.

Technical data	General
Supply voltage ext. encoder	No encoder supply
Cable length	15 m (between the monitored drive axis and the option connection)
Characteristic terminating impedance	Not integrated

NOTE:
Only for devices with safety technology option. Only available built-in ex factory.

7

7.11 Option 2 - one-cable interface

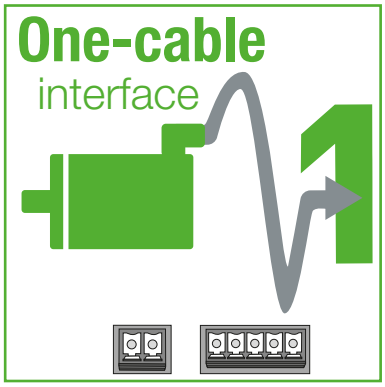

One-cable interface

Availability	
●	Operable without integrated safety control
-	Operable with integrated safety control

S02□□.□□□.□□□D.□□□□.x

Article designation

Brief description
This technology option permits evaluation of encoder systems according to the HIPERFACE DSL protocol. The two-wire encoder cable can be integrated directly into the motor cable. A motor temperature sensor is connected to the encoder inside the motor and is evaluated by the encoder. The data are also transferred via the encoder interface. In this way a one-cable motor system is implemented. When using a motor brake, the brake is connected directly to the option module.

Technical data	Encoder interface
Protocol	HIPERFACE DSL two-wire interface
Max. current	150 mA
Motor temperature sensor	Connected and evaluated in the encoder
Purpose	Only with motors in the LSP series with suitable encoder and associated motor cable

Technical data	Motor brake connection
Output voltage	+24 V DC (typ. U_{IN} – 1.4 V)
Max. output current	2.0 A
Supply U_{IN} (external)	+24 V DC +20%; I_{max} = 2.1 A
Purpose	Short-circuit proof, integrated overload protection, cable-break monitoring can be activated (I < 200 mA), functionality as for standard motor brake connection

NOTE:
Only available built-in ex factory.

Accessories

Technical data	5-pin connector
Order designation	1306.0001.0
Usage	For one-cable interface

8 Function packages

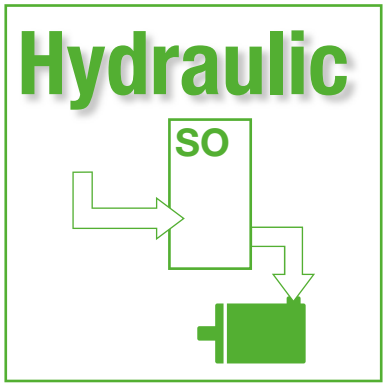

Type	Page	AC SO junior	AC SO 4-450 A	DC SO 4-450 A	AC DC SO PSU 26-360 kW
Standard function package [1]	Chap. 1.2 on page 11	●	●	●	●
iPlc function package for programming in IEC 61131	148	●	●	●	●
HF function package for rotating field frequencies up to 1600 Hz	149	-	●	●	-
Hydraulic function package	150	●	●	●	-

1) Included in the standard scope of supply for the hardware sizes.

8.1 iPlc function package - programming in IEC 61131

iPlc software

Availability

iPlc function package: SO□□.□□□.□□□□.□1□□.□

iPlc+HF function package: SO□□.□□□.□□□□.□8□□.□

Article designation

Brief description

The iPlc, programmable in IEC 61131, shares the microcontroller platform in the ServoOne with the drive control, so permitting optimised, fast access to all system and control parameters and interfaces. Extensive motion and interface libraries permit easy, flexible creation of applications and provide a wide range of solution options.

Technical data	General
Platform	Microcontroller 32-bit FPU (integrated in standard drive µC)
FLASH program memory	512 kbyte
Data memory SDRAM	512 kbyte
Remanent data memory NVRAM	512 byte (retain), 512 byte (persistent)
Real-time clock	No
Operating system	Single tasking

Technical data	Controller
Processing time	Dependent on CPU workload
Number of controllable axes	1
Real-time tasks	Cyclic (max. 3 tasks), free-running (max. 3 tasks)
Minimum cycle time	1 ms (5 ms recommended)
Online program change	No
Watchdog timer	Yes
Field bus access to variables	20 INT16 and INT32, 10 FLOAT32 parameters

Technical data	Programming and debugging
Programming system	CoDeSys V3
Programming languages	STL, LD, FBD, ST, AS, CFC editor
Command set	IEC 61131-3
Debug, single step, watch function	Yes
Simulation, online trace	Yes
Breakpoints	Yes
Source code download	No
Program management	No
Programming interface	Ethernet TCP/IP

NOTE:
Can also be ordered as an upgrade to the basic function package (article designation 1100.0000.0100.0) or to the HF function package (article designation 1100.0000.0800.0).

8.2 HF (High Frequency) function package

HF function package

Availability

HF function package:	S08□.□□□.□□□□.□7□□.□
HF+iPlc function package:	S08□.□□□.□□□□.□8□□.□

Article designation

Brief description
Function package for motor-side rotating field frequencies up to 1600 Hz

Technical data	HF functions
Output frequency	0 to 1600 Hz
Operation modes	Closed loop mode for ASM and PSM, U/f mode for ASM, sensor-less control for PSM
Encoder evaluation	Additional encoder evaluation for digital Hall senders (90° and 120°) with semi-automatic encoder offset calculation
Control circuit	Sine filters and output chokes are integrated into the control loop and are compensated accordingly
Field-weakening mode	For ASM 1:10 and PSM 1:2
	Power failure backup mode and synchronisation
Parallel operation	Via master/slave synchronisation (in option 2 requires the TwinSync interface)
U/f functionality	IxR and slip compensation, anti-oscillation, current limit controller, constant current control, characteristic switchover

NOTE:
Only available built-in ex factory.

NOTE:
The encoder systems EnDat and Hyperface are not supported in the HF function package.
HF function package and functional safety upon request.

8.3 Hydraulic function package

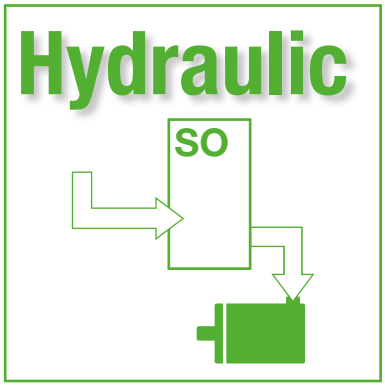

Hydraulic function package

Availability

Hydraulic function package:	S08□.□□□.□□□□.□2□□.□
Hydraulic+iPLC function package:	S08□.□□□.□□□□.□3□□.□

Article designation

Brief description

Servo hydraulics ("servopump") combine the advantages of an electrical servo system with the power density of a hydraulic drive. The servocontroller for the pump motor takes over the control of the hydraulic state variables (pressure, flow rate, possibly cylinder position).

Servo hydraulics function package:

- Pressure control with flow rate limiting
- Flow rate control with pressure limiting
- Speed control for hydraulic cylinders
- Positioning of hydraulic cylinders
- Feedback of pressure and temperature measurements via analogue output or field bus to the higher level controller
- Evaluation of pressure in bar, of flow rate in l/min
- Cavitation protection by maintaining minimum pressure and minimum speed (also for negative pump speeds)
- Non-linear pump characteristic parameters can be configured in software
- Indication of active and apparent power

NOTE:
Technology option 2 multi-functional input/output expansion (MIO) SOxxx.xxx.xxx6.xxxx is suitable for expanding the analogue and digital inputs/outputs for hydraulic applications.

Number of digital and analogue inputs and outputs	Digital input/output expansion (MIO)
2 differential, analogue inputs	-10 V ...+10 V or 0(4) ...20 mA Inputs can be selected as current or voltage inputs!
1 analogue output (floating)	0 ... 10 V, short-circuit proof (shutdown if there is a short circuit)
4 digital inputs	PLC-compatible
2 digital outputs	PLC-compatible, short-circuit proof (no damage on short circuit)
10.5 V supply voltage	50 mA
24 V DC supply voltage	Power feed, polarity reversal protection

9 Accessories

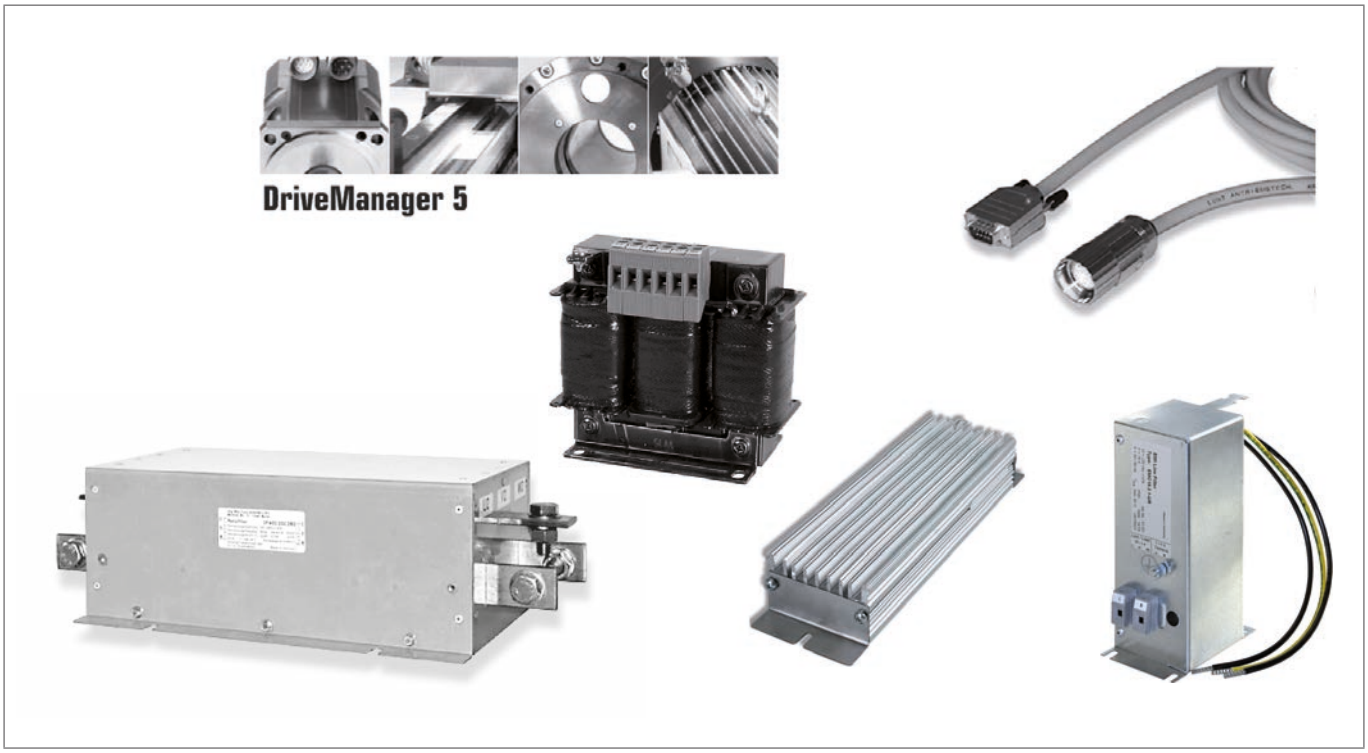

9.1 PC user software KeStudio DriveManager 5

KeStudio DriveManager 5

Availability

KeStudio DriveManager 5

Article designation

Brief description

The graphic PC user software DriveManager 5, with integrated online help and autotuning, cuts commissioning times substantially. KeStudio DriveManager 5 has network support and is able to manage multiple axis modules simultaneously in a project. A full version valid for 180 days is available on our homepage www.keba.com.

Technical data	KeStudio DriveManager 5
Support for the following functions	• Initial commissioning of one or more servocontrollers
	• Quick serial commissioning with a configurable commissioning file (containing firmware, parameters, iPLC program)
	• Operator control and diagnostics with cockpit, 6-channel oscilloscope, and others
	• Project management

User interface

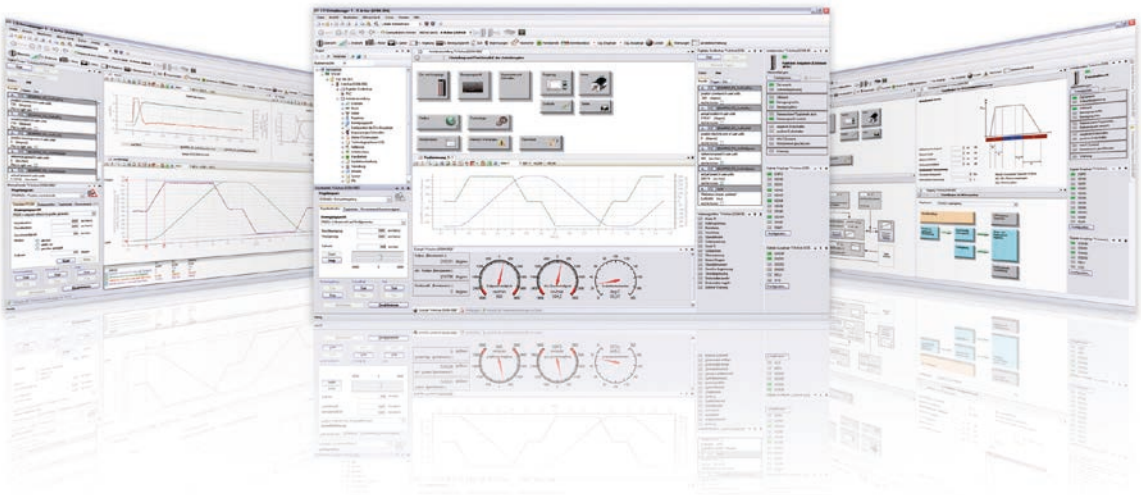

9.2 Data cables

9.2.1 Ethernet cable

Connection cable type CC-ECL03 (Ethernet)

Availability

CC-ECL03

Cable length in metres

Article designation

Technical data	CC-ECL03
Brief description	Cable for connection from servocontroller Ethernet port to PC running DriveManager
Cable length	3 m
Cable type	Crosslink Ethernet cable, CAT 5
Connections	2 x RJ45 connectors

9.2.2 USB cable

Connection cable type CC-USB03 (USB)

Availability

CC-USB03

Cable length in metres

Article designation

Technical data	CC-USB03
Brief description	Cable for connection from servocontroller USB port to PC running DriveManager
Cable length	3 m
Cable type	USB connection cable
Connections	1 x connector type A, 1 x connector type B

9.3 Motor/encoder cables

9.3.1 Advantages of KEBA system cables

- Many years of experience in design and manufacture
- Best EMC behaviour (shielding, signal cores twisted in pairs)
- 100% inspected quality also during routine testing
- Usage of only high-quality branded cables and connectors for best quality and reliability
- Very good price / performance ratio
- Functions confirmed with maximum cable lengths by in-house test laboratory.
- Retention of system responsibility
- Suitable for energy chains
- Degree of protection IP67 (motor end) by means of matched connector
- Approvals: CE, UL, UR
- CE conformity is confirmed at the system level (KEBA servocontroller + motor + cable)
- Colours as per DESINA for better overview in the switch cabinet
- Full flexibility in relation to length
- One-cable solution matched in extensive system test

9.3.2 System cable documentation

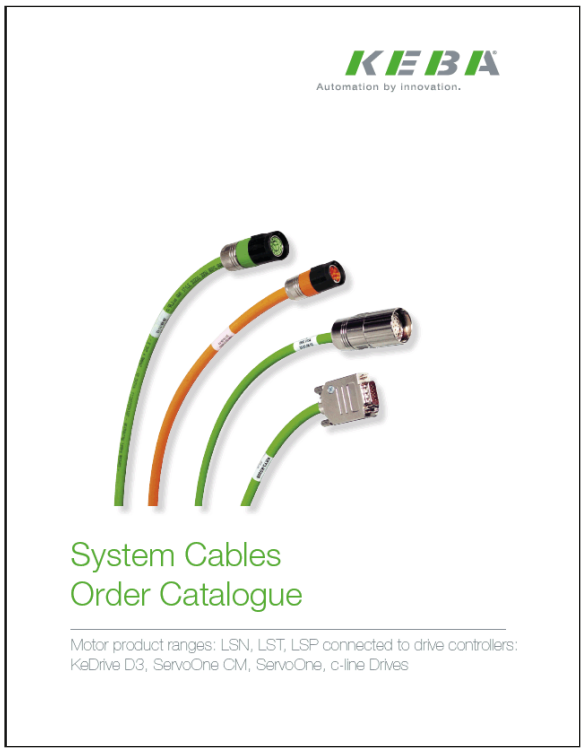

System Cables Order Catalogue (ID no: 0966.04B.x) for LSx motors

NOTE:

You will find details and the complete selection of motor cables available in the System Cables Order Catalogue 0966.24B.X.

9.4 Ready-made DC link cables for shared DC operation

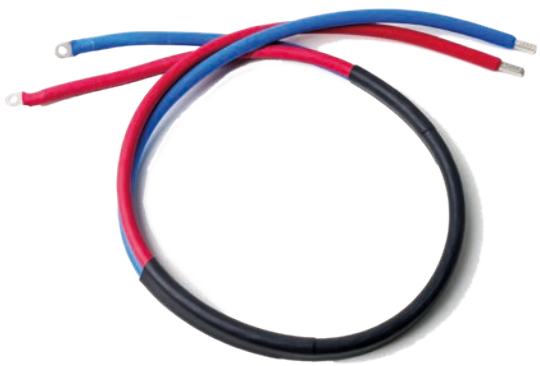

Availability

Connection set type AC/AC-DC/AC-ZK (980.9216)

Article no. / Technical data	980.9215	980.9216	980.9217
Brief description	Connection set AC/AC-DC/AC -ZK		
Cable length	0.8 m	1.0 m	0.9 m
Cross-section	6 mm²	16 mm²	25 mm²
Model	Single stranded wire 6 mm² covered with heatshrink sleeve	Single stranded wire 16 mm² covered with heatshrink sleeve	Single stranded wire 25 mm² covered with heatshrink sleeve
Connection	Ferrule 4-side crimping, Ring cable lug for M5 thread		Ferrule 4-side crimping, Flat lug with hole Ø 5.5 mm

NOTE:

- For details and connection, see Operation Manual ServoOne Single-Axis System (1100.20B.x)
- For details and connection, see Operation Manual ServoOne Multi-Axis System (1101.20B.x)

9.5 Mains chokes

LR34.8-UR

Availability

LR3□.□□□-UR

Product range and voltage *Rated current*

Article designation

Technical data	LR32.14-UR	LR34.xxx-UR
Mains voltage	1 x 230 V, -20% +15%, 50/60 Hz [1]	3 x 460 V -25% +10%, 50/60 Hz [1]
Overload factor	1.8 x I_N for 40 s	2.0 x I_N for 30 s
Ambient temperature	-25 °C to +45 °C, with power reduction up to 60 °C (1.3% per °C)	
Installation altitude	1000 m, with power reduction up to 2000 m (6% per 1000 m)	
Relative atmospheric humidity	15 ... 95%, condensation not permitted	
Storage temperature	-25 °C to +70 °C	
Degree of protection	IP00	
Short-circuit voltage	U_K 4% (corresponds to 9.2 V at 230 V)	U_K 4% (corresponds to 9.24 V at 400 V) applies for mains chokes with I_N = 4.0 A to 32 A [2] U_K 2% (corresponds to 4.6 V at 400 V) applies for mains chokes with I_N = 45 A to 450 A [3]
Permissible pollution degree	P2 as per EN 61558-1	
Thermal configuration	$I_{eff} \leq I_N$	$I_{eff} \leq I_N$
UL recognition	Model LR3X.xxx-UR has UL recognition for the USA and Canadian markets	

1) At mains frequency 60 Hz the power dissipation increases by approx. 5 - 10%. 2) Only for controllers up to 32 A. 3) Only for controllers from 45 A.

NOTE:

For recommended combinations of controllers and mains chokes refer to the relevant page of the controller catalogue. Mains chokes for ServoOne supply unit (PSU) are included in the mains connection sets, see “4.8 Technical data, supply units” on page 108.

9.5.1 Single-phase mains chokes

Article designation	Rated current [A]	Short circuit voltage U_K [%]	Power loss total [W]	Inductance [mH]	Weight [kg]	CU weight [kg]	Connection [mm²]
LR32.14-UR	14	4	23	2.1	2.0	0.3	4

Dimensions [mm]	LR32.14-UR
B (width)	85
H (height)	98
T (depth)	80
A	64
C	64
D Ø	5.8 x 11

Dimensional drawing

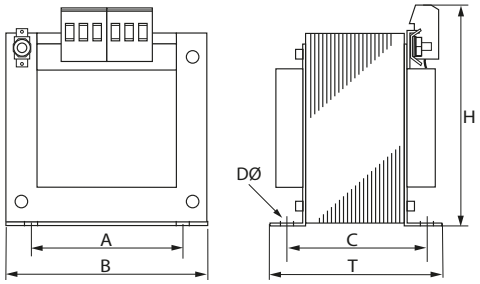

Symbolic depiction.

9.5.2 Three-phase mains chokes

Article designation	Rated current [A]	Short circuit voltage U_K [%]	Power loss total [W]	Inductance [mH]	Weight [kg]	CU weight [kg]	Connection
LR34.4-UR	4.2		16	7		0.4	
LR34.6-UR	6		22	4.88	2.5	0.8	
LR34.8-UR	8		29	3.66		1.0	4 mm²
LR34.14-UR	14	4	42	2.09	4.0	1.5	
LR34.17-UR	17		45	1.72		2.0	
LR34.24-UR	24		48	1.22	5.0	2.0	
LR34.32-UR	32		60	0.92	6.0	2.5	16 mm²
LR34.44-UR	45		51	0.33	5.0	2.0	
LR34.58-UR	60		65	0.25	7.0	3.5	
LR34.70-UR	72		80	0.20	7.0	4.0	33 mm²
LR34.88-UR	90		95	0.16	13	5.5	35 mm²
LR34.108-UR	110		103	0.13	15	7.0	
LR34.140-UR	143	2	128	0.10	25	8.5	70 mm²
LR34.168-UR	170		148	0.09	25	9.0	
LR34.210-UR	210		127	0.07	27	6.1	
LR34.250-UR	250		159	0.059	30	10.8	M12
LR34.325-UR	325		165	0.045	35	14.3	
LR34.450-UR	450		296	0.033	46	11.9	M12

Dimensions [mm]	LR34.4-UR	LR34.6-UR	LR34.8-UR	LR34.14-UR	LR34.17-UR	LR34.24-UR	LR34.32-UR	LR34.44-UR	LR34.58-UR
B (width)	125			155			190	155	190
H (height)	130			160		155	180	156	180
T (depth)	75			80		115	105	115	115
A	100			130			170	130	170
C	55			56.5		72	58	72	68
D Ø	5			8					

Dimensional drawing for LR34.4-UR to LR34.58-UR

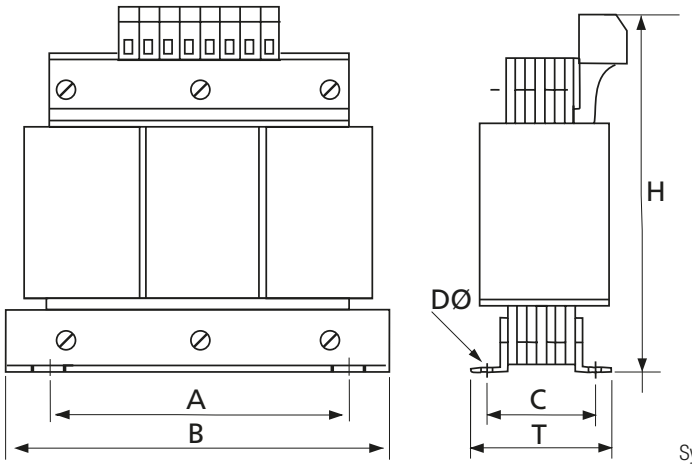

Symbolic depiction.

Dimensions [mm]	LR34. 70-UR	LR34. 88-UR	LR34. 108-UR	LR34. 140-UR	LR34. 168-UR	LR34. 210-UR	LR34. 250-UR	LR34. 325-UR	LR34. 450-UR
B (width)	190	230		240		265	300		
H (height)	240	300	285	300		230	275		
T (depth)	110	160	180	200		210	215		192
A	170	180		190		215	240		
C	78	98	122	125		126	120	145	160
D Ø	8			11					

Dimensional drawing for LR34.70-UR to LR34.168-UR

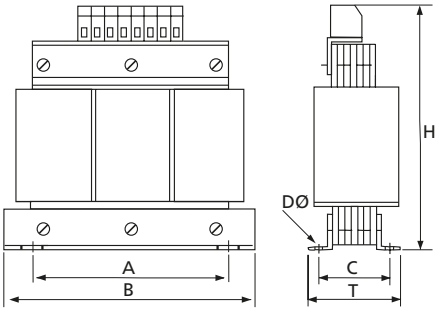

Symbolic depiction.

Dimensional drawing for LR34.210-UR to LR34.450-UR

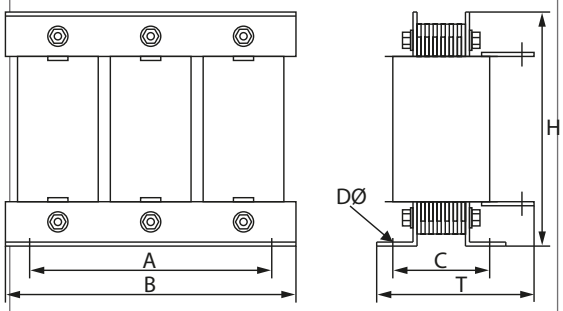

9

9.6 Braking resistors

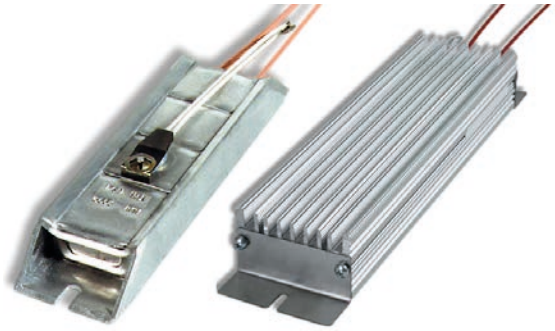

BR-090.01.540-UR BR-090.02.540-UR

Availability

BR-□□□.□□.□□0-UR

Value (in Ohms)

Mech. protection against touching
0 = Without 1 = With

Degree of protection

Power in (Watts)
01 = 100 W, 10 = 1 kW

Article designation

Technical data	As per fig. A1	As per fig. A2	As per fig. A3	As per fig. A4	As per fig. A5
Surface temperature	>250 °C				
Protection against touching	No				
Voltage	Max. 970 V DC				
High-voltage strength	4000 V DC				
Temperature monitoring	Yes, with bimetallic protector (breaking capacity 0.5 A / 230 V)				
Acceptance	CE-compliant; UL recognition				
Connection	1 m long PTFE-insulated litz wire			Terminal box with PG glands (M12 x 1.5 and M25 x 1.5)	

NOTE:
For recommended combinations of controllers and braking resistors refer to the relevant page of the controller catalogue.

Article designation	Continuous power [1] [W]	Resistance [Ω ±10%]	Peak power [W]			Degree of protection	Connection		Figure
			390 V DC	650 V DC	750 V DC		Resistance	Bimetallic protector	
BR-260.01.540-UR	35	260	580	1620	2160	IP54	AWG 16	AWG 18	A1
BR-260.02.540-UR	150	260	580	1620	2160	IP54	AWG 14	AWG 18	A2
BR-200.01.540-UR	35	200	760	2100	2800	IP54	AWG 16	AWG 18	A1
BR-200.02.540-UR	150	200	760	2100	2800	IP54	AWG 14	AWG 18	A2
BR-200.03.540-UR	300	200	760	2100	2800	IP54	AWG 14	AWG 18	A3
BR-090.01.540-UR	35	90	1690	4690	6250	IP54	AWG 16	AWG 18	A1
BR-090.02.540-UR	150	90	1690	4690	6250	IP54	AWG 14	AWG 18	A2
BR-090.03.540-UR	300	90	1690	4690	6250	IP54	AWG 14	AWG 18	A3
BR-090.10.650-UR	1000	90	1690	4690	6250	IP65	Max. AWG 6	Max. AWG 12	A4
BR-026.01.540-UR	35	26	-	16250	21600	IP54	AWG 16	AWG 18	A1
BR-026.02.540-UR	150	26	-	16250	21600	IP54	AWG 14	AWG 18	A2
BR-026.03.540-UR	300	26	-	16250	21600	IP54	AWG 14	AWG 18	A3
BR-026.10.650-UR	1000	26	-	16250	21600	IP65	Max. AWG 6	Max. AWG 12	A4
BR-026.20.650-UR	2000	26	-	16250	21600	IP65	Max. AWG 6	Max. AWG 12	A5
BR-020.03.540-UR	300	20	7600	21100	28100	IP54	AWG 14	AWG 18	A3
BR-015.03.540-UR	300	15	10100	28100	37500	IP54	AWG 14	AWG 18	A3

1) At cycle times of max. 150 s the required rated continuous power can be calculated according to the following formula:
Rated continuous power (W) = max. pulse duration (s) x peak power (W) / cycle time (s)

Dimensions, braking resistors [mm]

A1

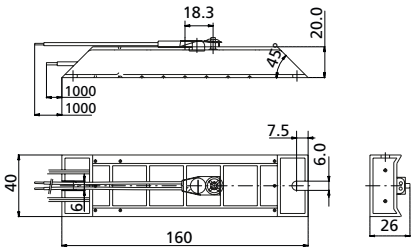

A2

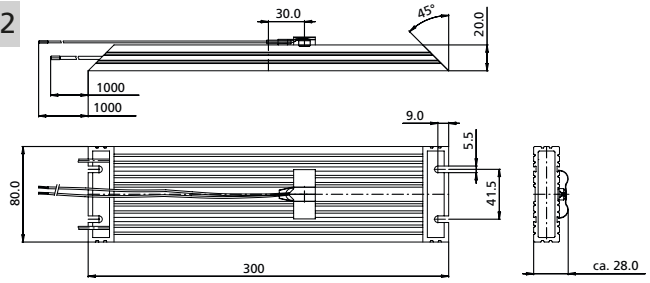

A3

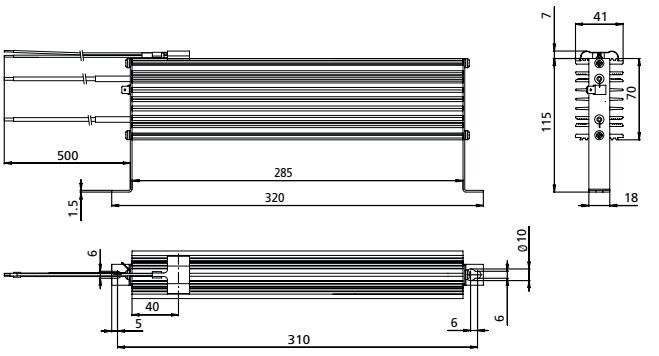

A4

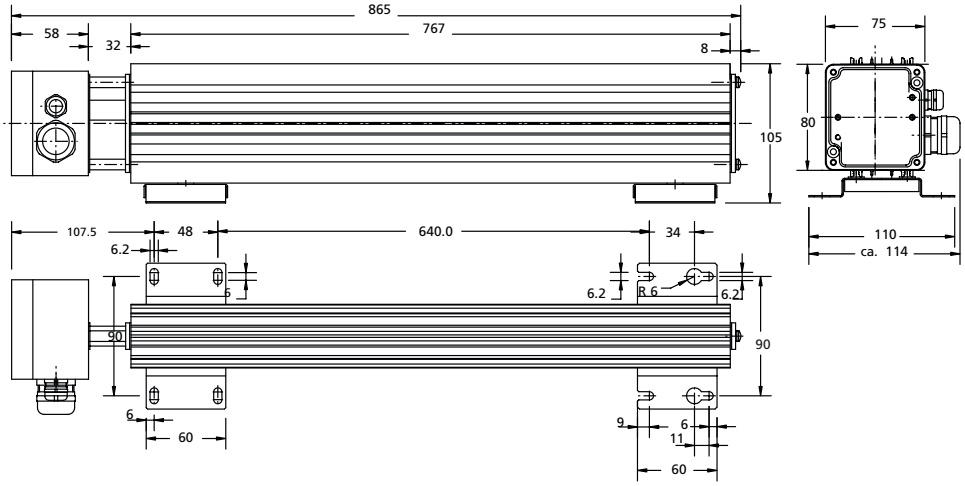

A5

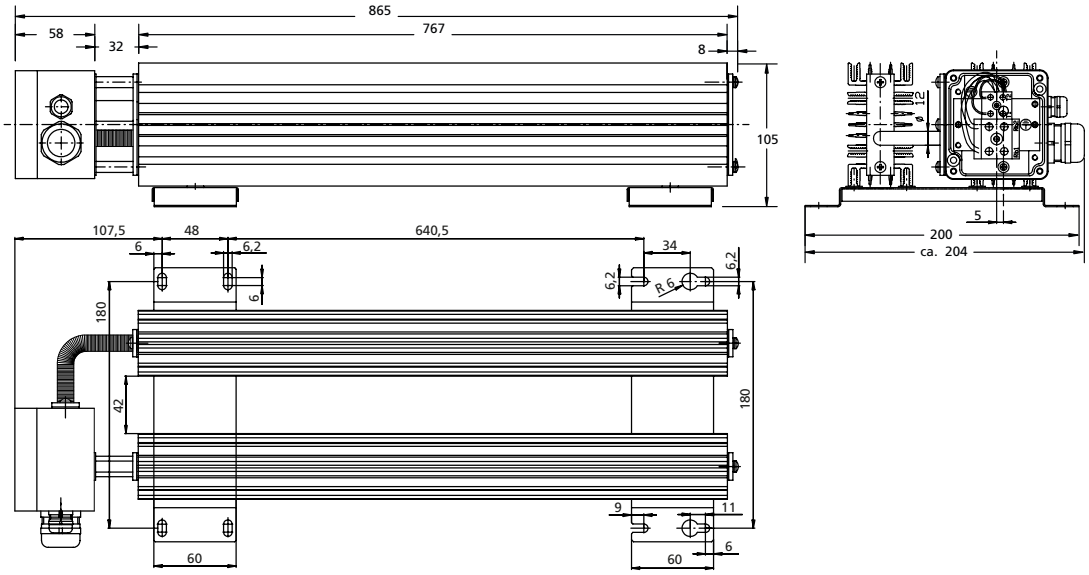

9.7 Mains filters, ServoOne junior

EMC19.2-1Ph,UR

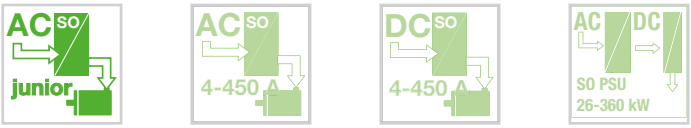

Availability

EMC□□.□-□Ph,UR

Rated current *Number of phases* *Version*

Article designation

Ambient conditions	EMCxx.x-1Ph,UR	EMCxx.x-3Ph,UR
Rated voltage	1 x 230 V AC +10% at 50/60 Hz	3 x 480 V AC +10% at 50/60 Hz
Overload	2x for 10 seconds, can be repeated after 6 minutes [1]	
Ambient temperature	Max. 45 °C	
IEC climate category	25/085/21	
Degree of protection, connections	IP00	
Acceptance	IEC 60939, UL 508	IEC 60939, UL 1238, UL 508
RFI suppression to EN 61800-3 -residential-	Motor cable length up to 10 m permitted	
RFI suppression to EN 61800-3 -industrial-	Motor cable length up to 30 m permitted	
Connections	Input: touch-protected terminals (IP20); output: litz wire	

1) Precondition: Mains filter mounted vertically on bare metal base plate

NOTE:

For recommended combinations of controllers and mains filters, refer to the page in the catalogue for the related controller.

9.7.1 Single-phase mains filters

Usable for servocontrollers	Article designation	Rated current [A]	Power dissipation [W]	Leakage current [1] [mA]	Touch current [2] [mA]	Weight [kg]
SO22.003	EMC8.2-1Ph,UR	8	2.5	7.9	15	0.6
SO22.006	EMC14.2-1Ph,UR	14	5.8			0.65
SO22.008	EMC19.2-1Ph,UR	19	6.1			0.75

1) Effective value of leakage current according to EN 60939 (2009) at 50 Hz and rated voltage. The leakage current may increase further due to the suppressed device.

2) Peak value measurement with measurement circuit according to EN 60990 at 50 Hz and rated voltage.
N: Peak value of touch current occurring in normal operation with PE conductor circuit open. At a touch current >3.5 mA the mains filter must be provided with a fixed connection as per EN 50178.
F: Peak value of worst-case touch current occurring if there is a fault with PE conductor and N conductor circuits open.

9.7.2 Three-phase mains filters

Usable for servocontrollers	Article designation	Rated current [A]	Power dissipation [W]	Leakage current [1] [mA]	Touch current [2] [mA]	Weight [kg]
S022.003	EMC5.2-3Ph,UR	5	2	1.7	2.3	0.75
S024.002						
S024.004						
S022.006	EMC11.2-3Ph,UR	11	7			0.70
S022.008						
S024.007						
S024.012	EMC16.2-3Ph,UR	16	12	6.0	4.5	1.40
S024.016	EMC25.2-3Ph,UR	25	17	4.8	4.5	1.60

1) Leakage current (I_{eff}) according to EN 60939 (2009) at 50 Hz and rated voltage with 2% asymmetry. The leakage current may increase further due to the suppressed device.
2) Peak value measurement with measurement circuit according to IEC 60990 at 50 Hz and rated voltage with 2% asymmetry.

9.7.3 Dimensions, single-phase mains filters

Article designation	Dimensions [mm]							PE	Input		Output
	A	B	C	D	E	F	M Ø		Clamping area [mm²]	Tightening torque [Nm]	Litz wire cross-section
EMC8.2-1Ph,UR	81	55	145	68	45	55	4	M4	0.2 - 4.0	0.6 - 0.8	AWG 16
EMC14.2-1Ph,UR											AWG 16
EMC19.2-1Ph,UR											AWG 14

9.7.4 Dimensions, three-phase mains filters

Article designation	Dimensions [mm]							PE	Input		Output
	A	B	C	D	E	F	M Ø		Clamping area [mm²]	Tightening torque [Nm]	Litz wire cross-section
EMC5.2-3Ph,UR	81	55	145	68	45	55	4	M4	0.2 - 4.0	0.6 - 0.8	AWG 16
EMC11.2-3Ph,UR											
EMC16.2-3Ph,UR	93	90	200	82	50		5	M5			2.5 mm²
EMC25.2-3Ph,UR									0.2 - 6.0	1.5 - 1.8	4 mm²

Dimensional drawings for EMC8.2-1Ph,UR to EMC11.2-3Ph,UR

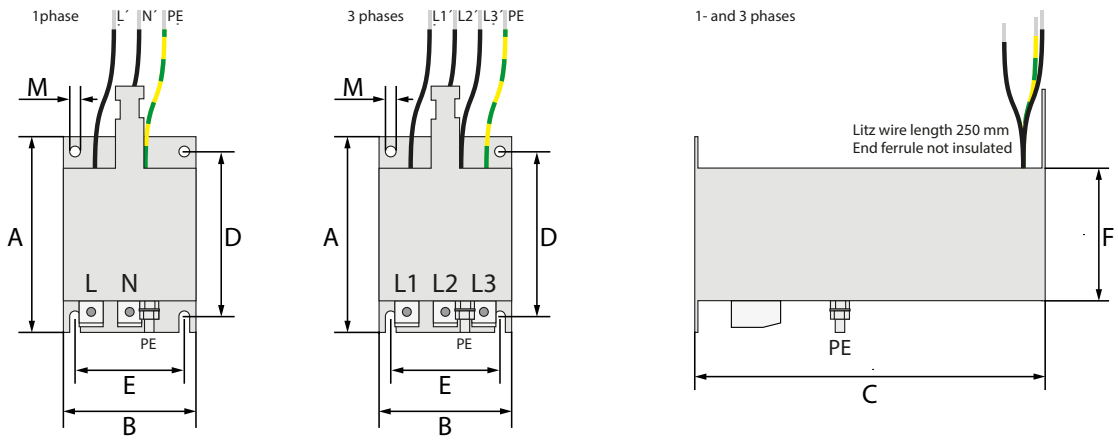

9

9.8 Mains filters, ServoOne single-axis system

EMC180.1-UR

Availability

EMC□□□.1,UR

Rated current | *Model*

Article designation

Ambient conditions	EMC.xxx.1-UR
Rated voltage	3 x 480 V AC +10% at 50/60 Hz
Ambient temperature	-25 °C to +40 °C, with power reduction up to 60 °C (1.3% per °C)
Installation altitude	1000 m, with power reduction up to 4000 m (6% per 1000 m)
Relative atmospheric humidity	15 ... 85%, condensation not permitted
Storage/transportation temperature	-25 °C to +70 °C / -40 °C to +85 °C
Degree of protection	IP20 (from EMC180.1-UR IP00)
Permissible pollution degree	P2 as per EN 61558-1
Acceptance	CE-compliant UL recognition (EMC7.1-UR to EMC150.1-UR)
RFI suppression to EN61800-3 (category C2 -residential-)	Motor cable length up to 50 m permitted
RFI suppression to EN61800-3 (category C3 -industrial-)	Motor cable length up to 100 m permitted

NOTE:

For recommended combinations of controllers and mains filters, refer to the page in the catalogue for the related controller.

Mains filters for ServoOne supply unit (PSU) are included in the mains connection sets, see “4.4 Current carrying capacity, ServoOne multi-axis system” on page 82.

9.8.1 Three-phase mains filters EMC7.1-UR to EMC150.1-UR

Article designation	Rated current [A]	Overload [1] [A]	Power loss [W]	Leakage current [2] [mA]	Touch current [3] [mA]	Weight [kg]
EMC7.1-UR	7	14	7.5	11.7	7.6	1.4
EMC16.1-UR	16	32	11	11.7	6.8	1.35
EMC25.1-UR	25	50	24	11.7	8.2	2.7
EMC35.1-UR	35	64	34	11.7	8.3	3.5
EMC63.1-UR	63	125	30	5.5	6.8	4.2
EMC100.1-UR	100	150	40	16.9	9.8	5.5
EMC150.1-UR	150	225	55	16.9	9.8	10.4

1) For 10 s, can be repeated after 6 minutes; precondition: Mains filter mounted vertically on bare metal base plate
2) Effective value of leakage current according to IEC 60939 (2009) at 50 Hz and rated voltage with 2% asymmetry. The leakage current may increase further due to the suppressed device.
3) Peak value measurement with measurement circuit according to EN 60990 at 50 Hz and rated voltage with 2% asymmetry.

9.8.2 Three-phase mains filters EMC180.1-UR to EMC500.1-UR

Article designation	Rated current [A]	Overload [4] [A]	Power loss [W]	Leakage current [5] [mA]	Touch current [6] [mA]	Weight [kg]
EMC180.1-UR	180	270	15	33.8	9.6	10.7
EMC220.1-UR	220	330	16	42	14	10.3
EMC250.1-UR	250	375	17			9.9
EMC300.1-UR	300	450	23			10.6
EMC400.1-UR	400	600	27			16.5
EMC500.1-UR	500	750	35			17.2

4) For 60 s, can be repeated after 30 minutes; precondition: Mains filter mounted vertically on bare metal base plate
5) Effective value of leakage current according to IEC 60939 (2009) at 50 Hz and rated voltage with 2% asymmetry. The leakage current may increase further due to the suppressed device.
6) Peak value measurement with measurement circuit according to EN 60990 at 50 Hz and rated voltage with 2% asymmetry.

9.8.3 Dimensions, three-phase mains filters EMC7.1-UR to EMC150.1-UR

Article designation	Dimensions [mm]								PE	Input/output	
	A	B	C	D	E	F	G	M Ø		Clamping area (mm²)	Tightening torque (Nm)
EMC7.1-UR	210	55	90	200	40	180	202	4.0	M5	0.2 ... 4.0	0.6 - 0.8
EMC16.1-UR											
EMC25.1-UR	270	62	115	255	40	240	272	5.5	M5	0.2 ... 6.0	1.5 - 1.8
EMC35.1-UR	270	62	145	255	40	240	305	5.5	M5	0.5 ... 16	2.0 - 2.3
EMC63.1-UR	280	62	180	270	40	240	305	7.0	M6	0.5 ... 16	2.0 - 2.3
EMC100.1-UR	290	75	200	270	45	250	336	7.0	M8	16 ... 50	6.0 - 8.0
EMC150.1-UR	320	90	220	300	60	280	380	7.0	M8	35 ... 95	15 - 20
Dimensional drawing for EMC7.1-UR to EMC150.1-UR											

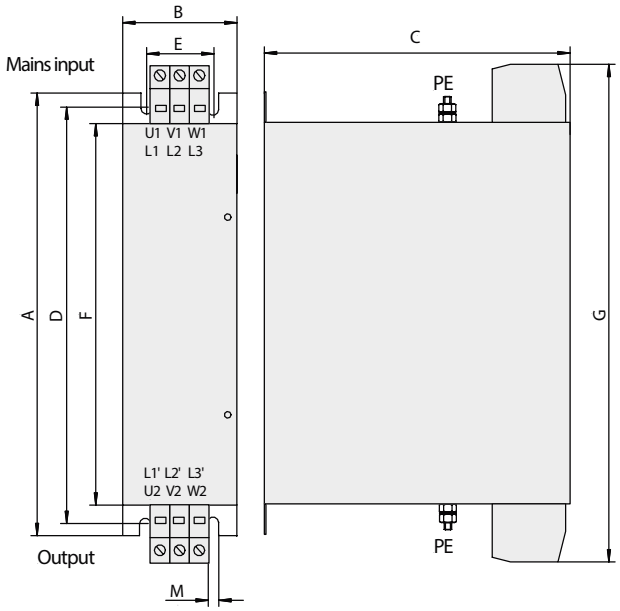

9.8.4 Dimensions, three-phase mains filters EMC180.1-UR to EMC500.1-UR

Article designation	Dimensions [mm]												PE	Input/output	
	A	B	C	D	E	F	G	H	I	K	L	M Ø		Busbar [mm]	Hole
EMC180.1-UR	310	200	120	180	180	160	410	45	86	30	91	M8	M10	3 x 25	M10
EMC220.1-UR													M10	4 x 25	M10
EMC250.1-UR								54					M10	5 x 25	M10
EMC300.1-UR													M12	6 x 25	M10
EMC400.1-UR	350	240	150	200	220	200	480	69	110		128		M12	8 x 25	M10
EMC500.1-UR													M12	8 x 30	M12

Dimensional drawing for EMC180.1-UR to EMC500.1-UR

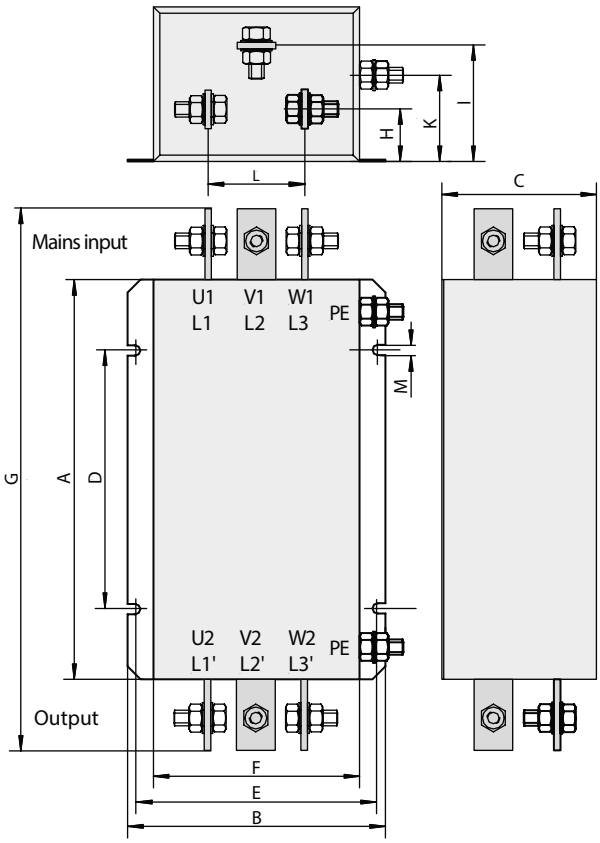

9.9 Mounting accessory sets

9.9.1 Liquid cooling connection set

Availability

1150.800.0

LCS01

Article designation

Brief description
The connection set includes all the components needed to connect ServoOne devices with liquid cooling to the cooling system (flow and return lines). It consists of a roll of Teflon tape, two elbows, two quick-fasteners, two couplings and two hose clamps.

NOTE:
Fits all ServoOne devices with liquid cooling.

9.10 EMC accessories

NOTE:
Can be used for control and motor cables for all screen connection plates.

9.10.1 Cable clamps and clips

Availability

1101.910.0	SCS01	3 pieces clamps 10-16 mm
1101.920.0	SCS02	3 pieces clamps 12-22 mm
1101.930.0	SCS03	3 pieces clamps 16-27 mm
1101.940.0	SCS04	3 pieces clamps 35-45 mm
1101.950.0	SCS05	3 pieces clamps 40-66 mm

Cable clamps — Article designation

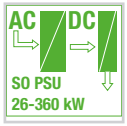

Availability

1101.960.0	SCS06	5 pieces clips up to 12 mm

Cable clips — Article designation

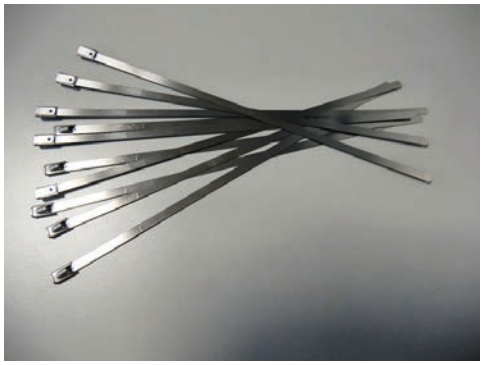

Availability

1101.970.0	SCS10	10 pieces metal cable ties

Metal cable ties — Article designation

9.11 Shield plates

NOTE:
Shield plates are suitable for cable clamps, clips or metal cable ties.
Scope of supply in each case only shield plate (cable clamps, clips or metal cable ties not included).

9.11.1 Shield plates for control connections

Shield terminal expansion BG1-4

Availability

Article designation	
1101.810.0 SCE01	Shield terminal expansion Control connections for BG1-4

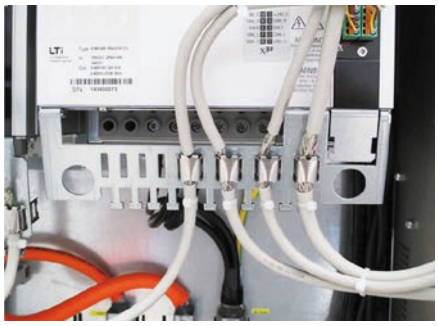

Shield terminal expansion BG5

Availability

Article designation	
1101.820.0 SCE05	Shield terminal expansion Control connections for BG5

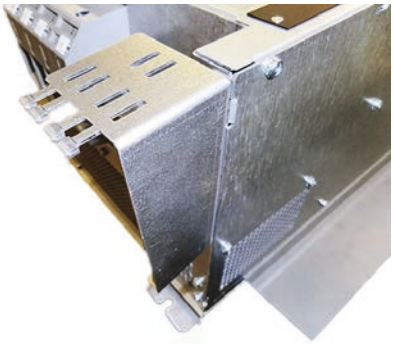

Shield terminal expansion BG6A and BG 7

Availability

Article designation	
1101.830.0 SCE06A	Shield terminal expansion Control connections for BG6A and BG7

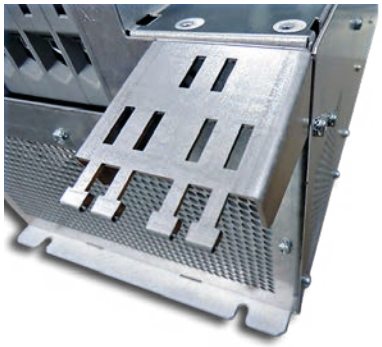

Shield plate BG6

Availability

1101.835.0	SCE06	Shield terminal expansion Control connections for BG6

Article designation

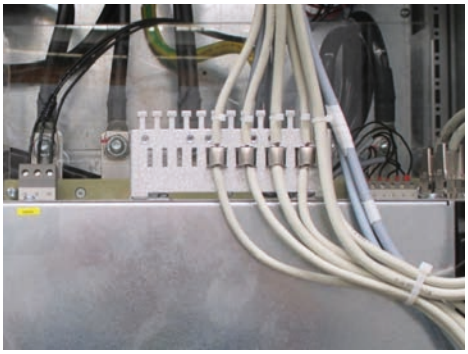

Shield terminal expansion BG7

Availability

1101.840.0	SCE07/SPM05	Shield terminal expansion Control connections for BG7

Article designation

9.11.2 Shield plates for motor connections

Shield terminal expansion BG5
145 x 65 mm

Availability

1101.840.0	SCE07/SPM05	Shield plate for BG5

Article designation

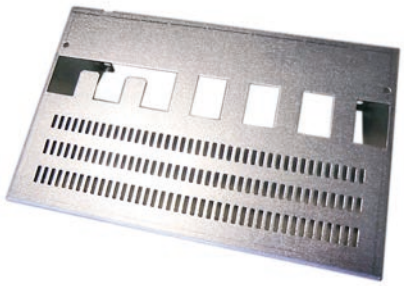

Shield plate BG6
280 x 175 mm

Availability

Article designation	
1101.860.0 SPM06	Shield plate for BG6/BG6A

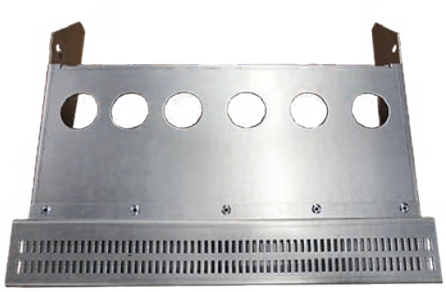

Shield terminal expansion BG7
385 x 230 mm

Availability

Article designation	
1101.870.0 SPM07	Shield plate for BG7 (incl. mounting accessories)

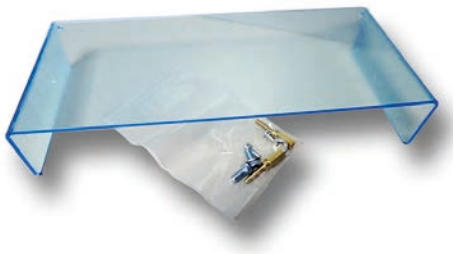

Terminal cover for BG7
380 x 157 mm

Availability

Article designation	
1190.802.0 SPC07	Terminal cover for BG7
1101.880.0 SPM / SPC07	Terminal cover for BG7 (incl. SPM07 and mounting accessories)

10 Overview of synchronous servomotors

Contents	Types
 LST servomotor – the versatile one	LST-037-x to LST-220-x 0.1 to 115 Nm Catalogue upon request. (ID. no.: 0814.25B.X)
 LSN servomotor – compact and low cost	LSN-050-x to LSN-190-x 0.26 to 60 Nm For catalogue, see Downloads (ID no.: 0814.205B.X)
  LSP servomotor – available quickly and at low cost	LSP servomotor with optional planetary gearbox – slim and cost-effective (LSP-04-x to LSP-13-x) For catalogue, see Downloads (ID no.: 0814.28B.X) LSP-04-x to LSP-19-x motors including one-cable solution among other features For catalogue, see Downloads (ID no.: 0814.28B.X)

Space for your notes

Date: 02/2022 • ID no.: 1100.24B.8-00

Fit for the future with bundled competencies

KEBA is an internationally successful electronics business based in Linz/ Austria with subsidiaries worldwide. Based on the motto "Automation by innovation." KEBA has for 50 years developed and manufactured innovative automation solutions of the highest quality for a very wide range of sectors.

www.keba.com

KEBA Industrial Automation Germany GmbH, Gewerbestrasse 5-9, 35633 Lahnau, telephone: +49 6441 966-0, fax: +49 6441 966-137, info@keba.de

KEBA Group worldwide
China • Germany • India • Italy • Japan • Netherlands
Austria • Romania • Switzerland • South Korea • Taiwan
Czech Republic • Turkey • USA